Keysight Model 6631B System DC Power Supply

Service Manual

KEYSIGHT TECHNOLOGIES

NOTICE: This document contains references to Agilent Technologies. Agilent's former Test and Measurement business has become Keysight Technologies. For more information, go to **www.keysight.com.**

KEYSIGHT
TECHNOLOGIES

Warranty Information

CERTIFICATION

Keysight Technologies certifies that this product met its published specifications at time of shipment from the factory. Keysight Technologies further certifies that its calibration measurements are traceable to the United States National Bureau of Standards, to the extent allowed by the Bureau's calibration facility, and to the calibration facilities of other International Standards Organization members.

WARRANTY

This Keysight Technologies hardware product is warranted against defects in material and workmanship for a period of three years from date of delivery. Keysight Technologies software and firmware products, which are designated by Keysight Technologies for use with a hardware product and when properly installed on that hardware product, are warranted not to fail to execute their programming instructions due to defects in material and workmanship for a period of 90 days from date of delivery. During the warranty period Keysight Technologies will, at its option, either repair or replace products which prove to be defective. Keysight Technologies does not warrant that the operation for the software firmware, or hardware shall be uninterrupted or error free.

For warranty service, with the exception of warranty options, this product must be returned to a service facility designated by Keysight Technologies. Customer shall prepay shipping charges by (and shall pay all duty and taxes) for products returned to Keysight Technologies. for warranty service. Except for products returned to Customer from another country, Keysight Technologies shall pay for return of products to Customer.

Warranty services outside the country of initial purchase are included in Keysight Technologies' product price, only if Customer pays Keysight Technologies international prices (defined as destination local currency price, or U.S. or Geneva Export price).

If Keysight Technologies is unable, within a reasonable time to repair or replace any product to condition as warranted, the Customer shall be entitled to a refund of the purchase price upon return of the product to Keysight Technologies.

LIMITATION OF WARRANTY

The foregoing warranty shall not apply to defects resulting from improper or inadequate maintenance by the Customer, Customer-supplied software or interfacing, unauthorized modification or misuse, operation outside of the environmental specifications for the product, or improper site preparation and maintenance. NO OTHER WARRANTY IS EXPRESSED OR IMPLIED. KEYSIGHT TECHNOLOGIES. SPECIFICALLY DISCLAIMS THE IMPLIED WARRANTIES OF MERCHANTABILITY AND FITNESS FOR A PARTICULAR PURPOSE.

EXCLUSIVE REMEDIES

THE REMEDIES PROVIDED HEREIN ARE THE CUSTOMER'S SOLE AND EXCLUSIVE REMEDIES. KEYSIGHT TECHNOLOGIES SHALL NOT BE LIABLE FOR ANY DIRECT, INDIRECT, SPECIAL, INCIDENTAL, OR CONSEQUENTIAL DAMAGES, WHETHER BASED ON CONTRACT, TORT, OR ANY OTHER LEGAL THEORY.

ASSISTANCE

The above statements apply only to the standard product warranty. Warranty options, extended support contacts, product maintenance agreements and customer assistance agreements are also available. Contact your nearest Keysight Technologies Sales and Service office for further information on Keysight Technologies' full line of Support Programs.

Safety Summary

The following general safety precautions must be observed during all phases of operation of this instrument. Failure to comply with these precautions or with specific warnings elsewhere in this manual violates safety standards of design, manufacture, and intended use of the instrument. Keysight Technologies assumes no liability for the customer's failure to comply with these requirements.

WARNING

Servicing instructions are for use by service-trained personnel. To avoid dangerous electrical shock, do not perform any servicing unless you are qualified to do so. Some procedures described in this manual are performed with power supplied to the instrument while its protective covers are removed. If contacted, the energy available at many points may result in personal injury.

BEFORE APPLYING POWER.

Verify that the product is set to match the available line voltage, the correct line fuse is installed, and all safety precautions (see following warnings) are taken. In addition, note the instrument's external markings described under "Safety Symbols"

GROUND THE INSTRUMENT.

Before switching on the instrument, the protective earth terminal of the instrument must be connected to the protective conductor of the (mains) power cord. The mains plug shall be inserted only in an outlet socket that is provided with a protective earth contact. This protective action must not be negated by the use of an extension cord (power cable) that is without a protective conductor (grounding). Any interruption of the protective (grounding) conductor or disconnection of the protective earth terminal will cause a potential shock hazard that could result in personal injury.

FUSES

Only fuses with the required rated current, voltage, and specified type (normal blow, time delay, etc.) should be used. Do not use repaired fuses or short-circuited fuseholders. To do so could cause a shock or fire hazard.

KEEP AWAY FROM LIVE CIRCUITS.

Operating personnel must not remove instrument covers. Component replacement and internal adjustments must be made by qualified service personnel. Do not replace components with power cable connected. Under certain conditions, dangerous voltages may exist even with the power cable removed. To avoid injuries, always disconnect power, discharge circuits and remove external voltage sources before touching components.

DO NOT SERVICE OR ADJUST ALONE.

Do not attempt internal service or adjustment unless another person, capable of rendering first aid and resuscitation, is present. Any adjustment, maintenance, and repair of this instrument while it is opened and under voltage should be avoided as much as possible. When this is unavoidable, such adjustment, maintenance, and repair should be carried out only by a skilled person who is aware of the hazard involved.

DO NOT SUBSTITUTE PARTS OR MODIFY INSTRUMENT.

Because of the danger of introducing additional hazards, do not install substitute parts or perform any unauthorized modification to the instrument. Return the instrument to a Keysight Technologies Sales and Service Office for service and repair to ensure that safety features are maintained.

SAFETY SYMBOLS

Refer to the table on the following page

WARNING The WARNING sign denotes a hazard. It calls attention to a procedure, practice, or the like, which, if not correctly performed or adhered to, could result in personal injury. Do not proceed beyond a WARNING sign until the indicated conditions are fully understood and met.

Caution The CAUTION sign denotes a hazard. It calls attention to an operating procedure, or the like, which, if not correctly performed or adhered to, could result in damage to or destruction of part or all of the product. Do not proceed beyond a CAUTION sign until the indicated conditions are fully understood and met.

Safety Symbol Definitions	
Symbol	**Description**
⎓	Direct current
∼	Alternating current
≂	Both direct and alternating current
3∼	Three-phase alternating current
⏚	Earth (ground) terminal
⏚	Protective earth (ground) terminal
⏚	Frame or chassis terminal
⊥	Terminal is at earth potential (Used for measurement and control circuits designed to be operated with one terminal at earth potential.)
N	Terminal for Neutral conductor on permanently installed equipment
L	Terminal for Line conductor on permanently installed equipment
|	On (supply)
○	Off (supply)
⏻	Standby (supply) Units with this symbol are not completely disconnected from ac mains when this switch is off. To completely disconnect the unit from ac mains, either disconnect the power cord or have a qualified electrician install an external switch.
▭	In position of a bi-stable push control
□	Out position of a bi-stable push control
⚠	Caution, risk of electric shock
⚠	Caution, hot surface
⚠	Caution (refer to accompanying documents)

Notice

The information contained in this document is subject to change without notice. Keysight Technologies makes no warranty of any kind with regard to this material, including but not limited to, the implied warranties of merchantability, and fitness for a particular purpose.

Keysight Technologies shall not be liable for errors contained herein or for incidental or consequential damages in connection with the furnishing, performance or use of this material.

This document contains proprietary information which is protected by copyright. All rights are reserved. No part of this document may be photocopied, reproduced, or translated into another language without the prior written consent of Keysight Technologies.

© Copyright 1998, 2000, 2014 Keysight Technologies

Printing History

The edition and current revision of this manual are indicated below. Reprints of this manual containing minor corrections and updates may have the same printing date. Revised editions are identified by a new printing date. A revised edition incorporates all new or corrected material since the previous printing date.

Changes to the manual occurring between revisions are covered by change sheets shipped with the manual. In some cases, the manual change applies only to specific instruments. Instructions provided on the change sheet will indicate if a particular change applies only to certain instruments.

Edition 1.....June, 1998

Edition 2.....September, 2000

Edition 3.....December, 2014

Instrument Identification

The power supply is identified by a unique serial number such as US36310101. The items in this serial number are explained as follows:

US36310101 The first two letters indicate the country of manufacture. US = United States.

The next four digits are the year and week of manufacture or last significant design change. Add 1960 to the first two digits to determine the year. For example, 36=1996. The third and fourth digits specify the week of the year (31 = the thirty-first week).

The last four digits (0101) are a unique number assigned to each unit.

Table of Contents

Warranty Information 2
Safety Summary 2
Notice 5
Printing History 5
Instrument Identification 5
Table of Contents 6

1 - INTRODUCTION 9
Organization 9
Safety Considerations 9
Related Documents 9
Revisions 10
Manual Revisions 10
Firmware Revisions 10
Electrostatic Discharge 10

2 - VERIFICATION AND PERFORMANCE TESTS 11
Introduction 11
Test Equipment Required 11
Measurement Techniques 12
Test Setup 12
Electronic Load 13
Current-Monitoring Resistor 13
Operation Verification Tests 13
Performance Tests 13
Programming 14
Constant Voltage (CV) Tests 14
CV Setup 14
Voltage Programming and Readback Accuracy 14
CV Load Effect 15
CV Source Effect 15
CV Noise (PARD) 15
Transient Recovery Time 16
Constant Current (CC) Tests 17
CC Setup 17
Current Programming and Readback Accuracy 17
Current Sink (-CC) Operation 17
Low Range Current Readback Accuracy 18
CC Load and Line Regulation 18
CC Load Effect 19
CC Source Effect 19
CC Noise (PARD) 20
Performance Test Equipment Form 21
Performance Test Record Forms 22

3 - TROUBLESHOOTING 23
Introduction 23
Test Equipment Required 24
Overall Troubleshooting 24
Flow Charts 24
Figure 3-1 Sheet 1. Troubleshooting Flowchart 25
Figure 3-1 Sheet 2. Troubleshooting Flowchart 26
Figure 3-1 Sheet 3. Troubleshooting Flowchart 27

Figure 3-1 Sheet 4. Troubleshooting Flowchart 28
Specific Troubleshooting Procedures **29**
Power-on Self-test Failures 29
CV/CC Status Annunciators Troubleshooting 30
Bias and Rail Voltages 30
Transformer Input 30
J207 Voltage Measurements 31
Manual Fan Speed Control 32
Disabling Protection Features 32
Post-repair Calibration **33**
Inhibit Calibration Switch 33
Calibration Password 33
Initialization **34**
ROM Upgrade **34**
Identifying the Firmware 34
Upgrade Procedure 34
Disassembly Procedures **35**
List of Required Tools 35
Cover, Removal and Replacement 36
A2 Interface Board, Removal and Replacement 36
Front Panel Assembly, Removal and Replacement 36
S1 Line Switch, Removal and Replacement 37
A3 Front Panel Board, Removal and Replacement 37
A1 Main Control Board 37
T1 Power Transformer, Removal and Replacement 37
Line Voltage Wiring 38

4 - PRINCIPLES OF OPERATION **39**
Introduction **39**
I/O Interface Signals **39**
A3 Front Panel Circuits **40**
A2 Interface Circuits **40**
Primary Interface 40
Secondary Interface 40
A1 Main Board Circuits **41**
Rail and Bias Circuits **41**
Output Power and Control Circuits 42
Control Circuits 42

5 - REPLACEABLE PARTS LIST **45**
Introduction **45**

6 - DIAGRAMS **49**
Introduction **49**
Figure 6-1. A1 Board Component and Test Point Locations 49
Figure 6-2. A1 Board Block Diagram 50
Figure 6-3. A2/A3 Boards Block Diagram 51
Figure 6-4. Rail and Bias Circuits 52

INDEX **53**

1

Introduction

Organization

This manual contains information for troubleshooting and repairing to the component level the Keysight Model 6631B System DC Power Supply. Hereafter it will be referred to as the dc power supply.

This manual is organized as follows:

Chapter 1 Organization

Chapter 2 Performance tests

Chapter 3 Troubleshooting procedures

Chapter 4 Principles of operation on a block-diagram level

Chapter 5 Replaceable parts

Chapter 6 Diagrams

Safety Considerations

WARNING: Hazardous voltages exist within the dc power supply chassis.

This dc power supply; is a Safety Class I instrument, which means it has a protective earth terminal. This terminal must be connected to earth ground through a power source equipped with a 3-wire, ground receptacle. Refer to the "Safety Summary" page at the beginning of this manual for general safety information. Before operation or repair, check the dc power supply and review this manual for safety warnings and instructions. Safety warnings for specific procedures are located at appropriate places in the manual.

Related Documents

The following documents are shipped with your dc power supply:

- a User's Guide, containing installation, operating, and calibration information
- a Programming Guide, containing detailed GPIB programming information.

Revisions

Manual Revisions

This manual was written for dc power supplies that have the same manufacturing dates (the first four digits) as those listed on the title page and whose unique identification number (the last four digits) are equal to or higher than those listed in the title page.

NOTE: If the first four digits of the serial number of your unit are higher than those shown in the title page, your unit was made after the publication of this manual and may have hardware or firmware differences not covered in this manual. If they are significant to the operation and/or servicing of the dc power supply, those differences are documented in one or more Manual Change sheets included with this manual.

Firmware Revisions

You can obtain the firmware revision number by either reading the integrated circuit label, or query the dc power supply using the GPIB *IDN?' query command (See Chapter 3, ROM Upgrade).

Electrostatic Discharge

CAUTION: The dc power supply has components that can be damaged by ESD (electrostatic discharge). Failure to observe standard antistatic practices can result in serious degradation of performance, even when an actual failure does not occur.

When working on the dc power supply, observe all standard, antistatic work practices. These include, but are not limited to:

- Working at a static-free station such as a table covered with static-dissipative laminate or with a conductive table mat (Keysight P/N 9300-0797, or equivalent).
- Using a conductive wrist strap, such as Keysight P/N 9300-0969 or 9300-0970.
- Grounding all metal equipment at the station to a single common ground.
- Connecting low-impedance test equipment to static-sensitive components only when those components have power applied to them.
- Removing power from the dc power supply before removing or installing printed circuit boards.

2

Verification and Performance Tests

Introduction

This document contains test procedures to verify that the dc power supply is operating normally and is within published specifications. There are three types of tests as follows:

Built-in Self Tests These tests, run automatically when the power supply is turned on, check most of the digital circuits and the programming and readback DACs.

Operation Verification These tests verify that the power supply is probably operating normally but do not check all of the specified operating parameters.

Performance Tests These tests check that the supply meets all of the operating specifications as listed in the Operating Manual.

NOTE: The dc power supply must pass the built-in self-tests before calibration or any of the verification or performance tests can be performed. If the supply fails any of the tests or if abnormal test results are obtained, refer to the troubleshooting procedures in Chapter 3. The troubleshooting procedures will determine if repair and/or calibration is required.

Test Equipment Required

Table 2-1 lists the equipment required to perform the verification and performance tests. A test record sheet with specification limits and measurement uncertainties (when test using the recommended test equipment) may be found at the back of this section.

WARNING: **SHOCK HAZARD.** These tests should only be performed by qualified personnel. During the performance of these tests, hazardous voltages may be present at the output of the supply.

Table 2-1. Test Equipment Required for Verification and Performance Tests

Type	Specifications	Recommended Model
Current Monitor Resistor	15 A (0.1 ohm) 0.04%	Guildline 9230/15
DC Power Supply	5 V, 10 A	Keysight 6642A, 6653A
Digital Voltmeter	Resolution: 10 nV @ 1V Readout: 8 1/2 digits Accuracy: 20 ppm	Keysight 3458A or equivalent
Electronic Load	10 V, 10 A, 100 W minimum, with transient capability	Keysight 6060B or equivalent
GPIB Controller	HP Series 300 or other controller with full GPIB capabilities	

Resistor (substitute for electronic load if load is too noisy for CC PARD test)	1 ohm, 50 W 0.7 ohm, 100W (Keysight 6631B) 400 ohm, 5 W 1k ohm, 5%, 3W	Ohmite L50J1R0 Ohmite RLS1R0 (1 ohm adjustable) Keysight 0811-1857 Keysight 0813-0001
Oscilloscope	Sensitivity: 1 mV Bandwidth Limit: 20 MHz Probe: 1:1 with RF tip	Keysight 54504A or equivalent
RMS Voltmeter	True RMS Bandwidth: 20 MHz Sensitivity: 100 µV	Keysight 3400B or equivalent
Variable-Voltage Transformer	Adjustable to highest rated input voltage range. Power: 500 VA	

Measurement Techniques

Test Setup

Most tests are performed at the rear terminals of the supply as shown in Figure 2-1a. Measure the dc voltage directly at the +S and -S terminals.

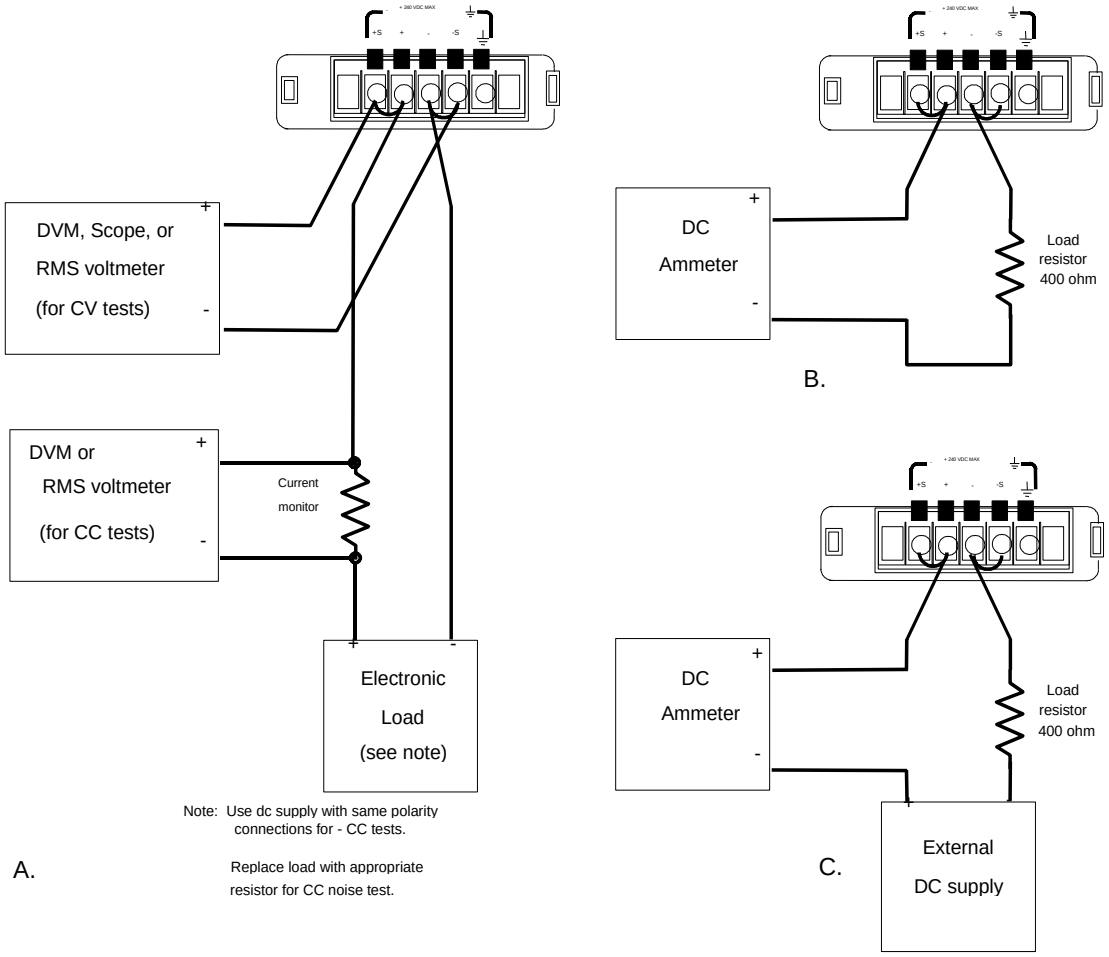

Figure 2-1. Test Setup

Electronic Load

Many of the test procedures require the use of a variable load capable of dissipating the required power. If a variable resistor is used, switches should be used to either; connect, disconnect, or short the load resistor. For most tests, an electronic load can be used. The electronic load is considerably easier to use than load resistors, but it may not be fast enough to test transient recovery time and may be too noisy for the noise (PARD) tests.

Fixed load resistors may be used in place of a variable load, with minor changes to the test procedures. Also, if computer controlled test setups are used, the relatively slow (compared to computers and system voltmeters) settling times and slew rates of the power supply may have to be taken into account. "Wait" statements can be used in the test program if the test system is faster than the supply.

Current-Monitoring Resistor

To eliminate output-current measurement error caused by voltage drops in the leads and connections, connect the current monitoring resistor between the -OUT and the load as a four-terminal device. Connect the current-monitoring leads inside the load-lead connections directly at the monitoring points on the resistor element.

Operation Verification Tests

To assure that the power supply is operating properly, without testing all specified parameters, perform the following test procedures:

a. Perform the turn-on and checkout procedures given in the Operating Manual.

b. Perform the Voltage Programming and Readback Accuracy test, and the Current Programming and Readback Accuracy tests from this procedure.

Performance Tests

NOTE: A full Performance Test consists of only those items listed as “Specifications” in Table A-1 of the Operating Manual, and that have a procedure in this document.

The following paragraphs provide test procedures for verifying the power supply's compliance with the specifications listed in Table A-1 of the User’s Guide. All of the performance test specifications and calculated measurement uncertainties are entered in the Performance Test Record Card. You can record the actual measured values in the column provided in this card.

If you use equipment other than that recommended in Table 2-1, you must recalculate the measurement uncertainties for the actual equipment used.

Programming

You can program the power supply from the front panel keyboard or from a GPIB controller when performing the tests. The test procedures are written assuming that you know how to program the power supply either; remotely from a GPIB controller or locally using the control keys and indicators on the power supply's front panel. Complete instructions on remote and local programming are given in the User's Guide and in the Programming Guide. Programming ratings are as follows:

Table 2-2. Programming Ratings

Model	Full Scale Voltage Rating	Voltage Max.	Full Scale Current Rating	Current Max.	OVP Range
Keysight 6631B	8 V	8.190	10 A	10.238 A	0 - 8.8 V

Constant Voltage (CV) Tests

CV Setup

If more than one meter or if a meter and an oscilloscope are used, connect each to the terminals by a separate pair of leads to avoid mutual coupling effects. For constant voltage dc tests, connect only to +S and -S, since the unit regulates the output voltage that appears between +S and -S, and not between the (+) and (-) output terminals. Use coaxial cable or shielded two-wire cable to avoid noise pickup on the test leads.

Voltage Programming and Readback Accuracy

This test verifies that the voltage programming, GPIB readback and front panel display functions are within specifications. Note that the values read back over the GPIB should be identical to those displayed on the front panel.

a. Turn off the supply and connect a digital voltmeter between the +S and the -S terminals as shown in Figure 2-1a.

b. Turn on the supply and program the supply to zero volts and the maximum programmable current with the load off.

c. Record the output voltage readings on the digital voltmeter (DVM) and the front panel display. The readings should be within the limits specified in the performance test record chart for the appropriate model under CV PROGRAMMING @ 0 VOLTS. Also, note that the CV annunciator is on. The output current reading should be approximately zero.

d. Program the output voltage to full-scale.

e. Record the output voltage readings on the DVM and the front panel display. The readings should be within the limits specified in the performance test record chart for the appropriate model under CV PROGRAMMING @ FULL SCALE.

CV Load Effect

This test measures the change in output voltage resulting from a change in output current from full load to no load.

a. Turn off the supply and connect the output as shown in Figure 2-1a with the DVM connected between the +S and -S terminals.

b. Turn on the supply and program the current to the maximum programmable value and the voltage to the full-scale value.

c. Adjust the load for the full-scale current as indicated on the front panel display. The CV annunciator on the front panel must be on. If it is not, adjust the load so that the output current drops slightly.

d. Record the output voltage reading on the DVM connected to +S and -S.

e. Open the load and again record the DVM voltage reading. The difference between the DVM readings in steps (d) and (e) is the load effect voltage, and should not exceed the value listed in the performance test record chart for the appropriate model under CV LOAD EFFECT.

CV Source Effect

This test measures the change in output voltage that results from a change in ac line voltage from the minimum to maximum value within the line voltage specifications.

a. Turn off the supply and connect the ac power line through a variable voltage transformer.

b. Connect the output as shown in Figure 2-1a with the DVM connected between the +S and the -S terminals. Set the transformer to nominal line voltage.

c. Turn on the supply and program the current to the maximum programmable value and the output voltage to the full-scale value .

d. Adjust the load for the full-scale current value as indicated on the front panel display. The CV annunciator on the front panel must be on. If it is not, adjust the load so that the output current drops slightly.

e. Adjust the transformer to the lowest rated line voltage (e.g., 104 Vac for a 115 Vac nominal line voltage input).

f. Record the output voltage reading on the DVM.

g. Adjust the transformer to the highest rated line voltage (e.g., 127 Vac for 115 Vac nominal line voltage input).

h. Record the output voltage reading on the DVM. The difference between the DVM reading is steps (f) and (h) is the source effect voltage and should not exceed the value listed in the performance test record chart for the appropriate model under CV SOURCE EFFECT.

CV Noise (PARD)

Periodic and random deviations (PARD) in the output (ripple and noise) combine to produce a residual ac voltage superimposed on the dc output voltage. CV PARD is specified as the rms or peak-to-peak output voltage in the frequency range specified in the User’s Guide.

a. Turn off the supply and connect the output as shown in Figure 2-1a to an oscilloscope (ac coupled) between the (+) and the (-) terminals. Set the oscilloscope's bandwidth limit to 20 MHz and use an RF tip on the oscilloscope probe.

b. Turn on the supply and program the current to the maximum programmable value and the output voltage to the full-scale value.

c. Adjust the load for the full-scale current value as indicated on the front panel display.

d. Note that the waveform on the oscilloscope should not exceed the peak-to-peak limits in the performance test record chart for the appropriate model under CV NOISE (PARD).

e. Disconnect the oscilloscope and connect an ac rms voltmeter in its place. The rms voltage reading should not exceed the RMS limits in the performance test record chart for the appropriate model under CV NOISE (PARD).

Transient Recovery Time

This test measures the time for the output voltage to recover to within the specified value following a 50% change in the load current.

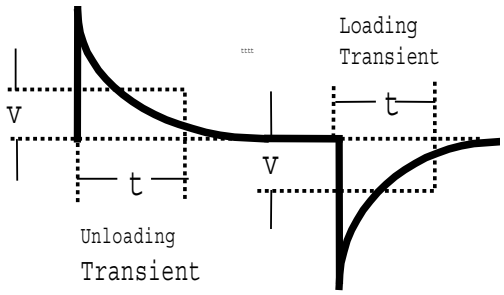

Figure 2-2. Transient Waveform

a. Turn off the supply and connect the output as in Figure 2-1a with the oscilloscope across the +S and the -S terminals.

b. Turn on the supply and program the output voltage to the full-scale value and the current to the maximum programmable value.

c. Set the load to the Constant Current mode and program the load current to 1/2 the power supply full-scale rated current.

d. Set the electronic load's transient generator frequency to 100 Hz and its duty cycle to 50%.

e. Program the load's transient current level to the supply's full-scale current value and turn the transient generator on.

f. Adjust the oscilloscope for a waveform similar to that in Figure 2-2.

g. The output voltage should return to within the specified voltage (v) in the specified time (t). Check both loading and unloading transients by triggering on the positive and negative slope. Record the voltage level at 100uS in the test record card under Transient Response.

Constant Current (CC) Tests

CC Setup

Follow the general setup instructions in the Measurement Techniques paragraph and the specific instructions given in the following paragraphs.

Current Programming and Readback Accuracy

This test verifies that the current programming and readback are within specification.

a. Turn off the supply and connect the current monitoring resistor across the power supply output and the DVM across the resistor. See "Current Monitoring Resistor" for connection information.

b. Turn on the supply and program the output voltage to 5 V and the current to zero.

c. Divide the voltage drop (DVM reading) across the current monitoring resistor by its resistance to convert to amps and record this value (Iout). Also, record the current reading on the front panel display. The readings should be within the limits specified in the performance test record card for the appropriate model under CC PROGRAMMING @ 0 AMPS.

d. Program the output current to full-scale .

e. Divide the voltage drop (DVM reading) across the current monitoring resistor by its resistance to convert to amps and record this value (Iout). Also, record the current reading that appears on the front panel display. The readings should be within the limits specified in the performance test record card for the appropriate model under CC PROGRAMMING @ FULL-SCALE.

Current Sink (-CC) Operation

This test verifies current sink operation and readback.

a. Turn off the supply and connect the output as shown in Figure 2-1a, except connect a dc power supply in place of the electronic load as indicated. Connect the DMM across the current shunt.

b. Set the external power supply to 5 V and the current limit approximately 20% above the full scale current rating of the supply under test.

c. Turn on the supply under test and program the output voltage to zero and full scale output current. The current on the UUT display should be approximately full scale current negative.

d. Divide the voltage drop across the current monitoring resistor by its resistance to obtain the current sink value in amps and subtract this from the current reading on the display. The difference between the readings should be within the limits specified in the performance test record chart under CURRENT SINK READBACK.

Low Range Current Readback Accuracy

This test verifies the readback accuracy of the 20 milliampere current range.

a. Turn off the supply and connect the output as shown in Figure 2-1b. Set the DMM to operate in current mode.

b. Turn on the supply under test, set the current to low range and program the output voltage to zero and full scale output current. The current on the UUT display should be approximately 0 mA.

c. Record the current reading on the DMM and the reading on the front panel display. The difference between the two readings should be within the limits specified in the performance test record chart under 20mA RANGE CURRENT READBACK ACCURACY @ 0A.

d. Program the output voltage to 8 V and record the current reading on the DMM and the reading on the front panel display. The difference between the readings should be within the limits specified in the performance test record chart for the appropriate model under 20mA RANGE CURRENT READBACK ACCURACY @ 20mA

e. Turn off the supply and connect the output and an external supply as shown in Figure 2-1c. Set the DMM to operate in current mode.

f. Turn on the external supply and program it to 8 V and 1 A. Then program the supply under test to zero volts and 1 amp. The UUT display should read approximately –20 mA.

c. Record the current reading on the DMM and the reading on the front panel display. The difference between the two readings should be within the limits specified in the performance test record chart under 20mA RANGE CURRENT READBACK ACCURACY @ –20 mA.

CC Load and Line Regulation

These tests (CC Load Effect and CC Source Effect given below) are tests of the dc regulation of the power supply's output current. To insure that the values read are not the instantaneous measurement of the ac peaks of the output current ripple, several dc measurements should be made and the average of these readings calculated. An example of how to do this is given below using a Keysight 3458A System Voltmeter programmed from the front panel. Set up the voltmeter and execute the "Average Reading" program follows:

a. Program 10 power line cycles per sample by pressing NPLC 1 0 ENTER .

b. Program 100 samples per trigger by pressing (N Rdgs/Trig) 1 0 0 ENTER .

c. Set up voltmeter to take measurements in the statistical mode as follows:
Press Shift key, f0, Shift key, N
Press ^ (up arrow) until MATH function is selected, then press >.
Press ^ (up arrow until STAT function is selected then press (ENTER).

d. Set up voltmeter to read the average of the measurements as follows:
Press Shift key, f1, Shift key, N.
Press down arrow until RMATH function is selected, then press >.
Press ^ (up arrow) until MEAN function is selected, then press ENTER.

e. Execute the program by pressing f0, ENTER, TRIG, ENTER

f. Wait for 100 readings and then read the average measurement by pressing f1, ENTER.

To repeat the measurement, perform steps (e) and (f).

CC Load Effect

This test measures the change in output current for a change in load from full scale output voltage to short circuit.

a. Turn off the supply and connect the output as shown in Figure 2-1a with the DVM connected across the current monitoring resistor.

b. Turn on the supply and program the current to the full scale current value and the output voltage to the maximum programmable voltage value.

c. Adjust the load in the CV mode for full scale voltage as indicated on the front panel display. Check that the CC annunciator of the UUT is on. If it is not, adjust the load so that the output voltage drops slightly.

d. Record the output current reading (DVM reading/current monitor resistance value in ohms). You may want to use the average reading program described under “CC Load and Line Regulation”.

e. Short the load switch and record the output current reading. The difference in the current readings in steps (d) and (e) is the load effect and should not exceed the limit specified in the performance test record chart for the appropriate model under CC LOAD EFFECT.

CC Source Effect

This test measures the change in output current that results when the AC line voltage changes from the minimum to the maximum value within the specifications.

a. Turn off the supply and connect the ac power line through a variable voltage transformer.

b. Connect the output terminals as shown in Figure 2-1a with the DVM connected across the current monitoring resistor. Set the transformer to the nominal line voltage.

c. Turn on the supply and program the current to the full scale value and the output voltage to the maximum programmable value.

d. Adjust the load in the CV mode for full scale voltage as indicated on the front panel display. Check that the CC annunciator of the UUT is on. If it is not, adjust the load so that the output voltage drops slightly.

e. Adjust the transformer to the lowest rated line voltage.

f. Record the output current reading (DVM reading/current monitoring resistor in ohms). You may want to use the average reading program described under “CC Load and Line Regulation”.

g. Adjust the transformer to the highest rated line voltage.

h. Record the output current reading again. The difference in the current readings in steps (f) and (h) is the CC source effect and should not exceed the values listed in the performance test record card under CC SOURCE EFFECT.

CC Noise (PARD)

Periodic and random deviations (PARD) in the output combine to produce a residual ac current, as well, as an ac voltage superimposed on the dc output. Constant current (CC) PARD is specified as the rms output current in a frequency range 20 Hz to 20 Mhz with the supply in CC operation.

a. Turn off the supply and connect the load, monitoring resistor, and rms voltmeter across the monitoring resistor as shown in Figure 2-1a. The Current Monitoring resistor may have to be substituted by one with a higher resistance and power rating, such as a 1 ohm 50 W current shunt in series with the appropriate 3, 24, or 99 ohm resistor for the 6632B and 66332A , 6633B or 6634B respectively , to get the RMS voltage drop high enough to measure with the RMS voltmeter (For the 6631B use the 0.1 ohm shunt and a 0.9 ohm resistor). Leads should be as short as possible to reduce noise pick-up. An electronic load may contribute ripple to the measurement so if the RMS noise is above the specification the resistive loads described above may have to be substituted for this test.

b. Check the test setup for noise with the supply turned off. Other equipment (e.g. computers, DVMs, etc.) may affect the reading.

c. Turn on the supply and program the current to full scale and the output voltage to the maximum programmable value.

d. The output current should be at the full scale rating with the CC annunciator on.

e. Divide the reading on the rms voltmeter by the monitor resistor to obtain rms current. It should not exceed the values listed in the performance test record card under CC NOISE (RMS).

Performance Test Equipment Form

Test Facility:_____

_____

_____

_____

Model _____

Serial No. _____

Options _____

Firmware Revision _____

Report Number _____

Date _____

Customer _____

Tested By _____

Ambient Temperature (C) _____

Relative Humidity (%) _____

Nominal Line Frequency _____

Special Notes:

Test Equipment Used:

Description	**Model No.**	**Trace No.**	**Cal. Due Date**
AC Source	_____	_____	_____
DC Voltmeter	_____	_____	_____
RMS Voltmeter	_____	_____	_____
Oscilloscope	_____	_____	_____
Electronic Load	_____	_____	_____
Current Shunt	_____	_____	_____
	_____	_____	_____

Performance Test Record Forms

Model Keysight 6631B	**Report No _____**		**Date _____**	
Test Description	**Minimum Specs.**	**Results***	**Maximum Specs.**	**Measurement Uncertainty**
Constant Voltage Tests				
Voltage Programming and Readback				
CV Programming Accuracy @ 0V	– 10 mV	_____	+ 10 mV	1.6 µV
Voltage Readback Accuracy @ 0V	**Vout** – 3 mV	_____	**Vout** + 3 mV	1.6 µV
CV Programming @ Full Scale (8V)	7.986 V	_____	8.014 V	88.5 µV
Voltage Readback Accuracy @ Full Scale	**Vout** – 5.4 mV	_____	**Vout** +5.4 mV	88.5 µV
CV Load Effect	– 2 mV	_____	+ 2 mV	900 nV
CV Source Effect	– 0.5 mV	_____	+ 0.5 mV	900 nV
CV Noise (PARD)				
Peak-to-Peak	0 mV	_____	+ 3 mV	872 µV
RMS	0 mV	_____	+ 0.3 mV	50 µV
Transient Response				
Voltage in 100 µs	0 mV	_____	+ 8 mV	1 mV
Constant Current Tests				
Current Programming and Readback				
CC Programming Accuracy @ 0A	– 2.0 mA	_____	+ 2.0 mA	15.2 µA
Current Readback Accuracy @ 0A	**Iout** – 0.5 mA	_____	**Iout +** 0.5 mA	15.2 µA
CC Programming @ Full Scale (10A)	9.993 A	_____	10.007 A	3.1 mA
Current Readback Accuracy @ Full Scale	**Iout** – 20.5 mA	_____	**Iout +** 20.5 mA	3.1 mA
Current Sink Readback	**Isink** – 21.1 mA	_____	**Isink** + 21.1mA	3.1 mA
20 mA Range Current Readback				
Current Readback Accuracy @ 0 A	– 2.5 µA	_____	+ 2.5 µA	0.1 µA
Current Readback Accuracy @ + 20 mA	**Iout** – 22.5 µA	_____	**Iout** + 22.5 µA	1.7 µA
Current Readback Accuracy @ – 20 mA	**Iout** – 22.5 µA	_____	**Iout** + 22.5 µA	1.7 µA
Current Ripple and Noise (PARD)				
RMS	0 mA	_____	+ 2.0 mA	500 µA
CC Load Effect	– 1.0 mA	_____	+ 1.0 mA	4.0 µA
CC Source Effect	– 0.5 mA	_____	**+** 0.5 mA	4.0 µA

* Enter your test results in this column

3

Troubleshooting

Introduction

WARNING: **SHOCK HAZARD.** Most of the troubleshooting procedures given in this chapter are performed with power applied and protective covers removed. Such maintenance should be performed only by service trained personnel who are aware of the hazards (for example, fire and electrical shock).

CAUTION: This instrument uses components which can either be damaged or suffer serious performance degradation as a result of ESD (electrostatic discharge). Observe the standard antistatic precautions to avoid damage to the components. An ESD summary is given in Chapter 1.

This chapter provides troubleshooting and repair information for the dc power supply. Before attempting to troubleshoot the dc power supply, first check that the problem is with the power supply itself and not with an associated circuit. The verification tests in Chapter 2 enable you to isolate a problem to the dc power supply. Troubleshooting procedures are provided to isolate a problem to one of the circuit boards. Figure 3-2 shows the location of the circuit boards and other major components of the unit. Disassembly procedures are provided at the end of this chapter and should be referred to, as required, in order to gain access to and/or replace defective components.

If a component is defective, replace it and then conduct the verification test given in Chapter 2.

NOTE: Note that when the A1 Control or the A2 Interface PC assemblies are replaced, the supply must be calibrated (See "Post Repair Calibration" later in this chapter). If the A2 Interface Board is replaced, the supply must be initialized before it is calibrated. See "Initialization" later in this chapter.

Chapter 5 lists all of the replaceable parts for the power supplies. Chapter 6 contains block diagrams, test point measurements, and component location diagrams to aid you in troubleshooting the supply.

Test Equipment Required

Table 3-1 lists the test equipment required to troubleshoot the power supply. Recommended models are listed.

Table 3-1. Test Equipment Required for Troubleshooting

Type	Purpose	Recommended Model
GPIB Controller	To communicate with the supply via the GPIB interface	HP Series 300
Digital Voltmeter	To check various voltage levels	Keysight 3458A
Oscilloscope	To check waveforms and signal levels	Keysight 54504A/54111A
Electronic Load	To test operation of current circuit	Keysight 6060B
Ammeter/Current Shunt	To measure output current	Guildline 9230/15

Overall Troubleshooting

Overall troubleshooting procedures for the power supply are given in the Figure 3-1. The procedures first check that neither an AC input, nor a bias supply failure is causing the problem and that the supply passes the turn-on self test (error annunciator stays off). The normal turn-on, self-test indications are described in the "Checkout Procedure" in Chapter 3 of the User's Guide.

If the supply passes the self test and there are no obvious faults, you should perform the verification procedures in Chapter 2 from the front panel to determine if any functions are not calibrated or are not operating properly. Then program and read back a voltage via the GPIB to see if the supply responds properly to bus commands. If the supply fails any of the tests, you will be directed to the applicable flow chart or troubleshooting procedure.

Flow Charts

Troubleshooting flow charts are given in Figure 3-1 sheets 1-4. The flow charts may make reference to test points shown in the block diagrams and on the component location diagrams listed in Chapter 6.

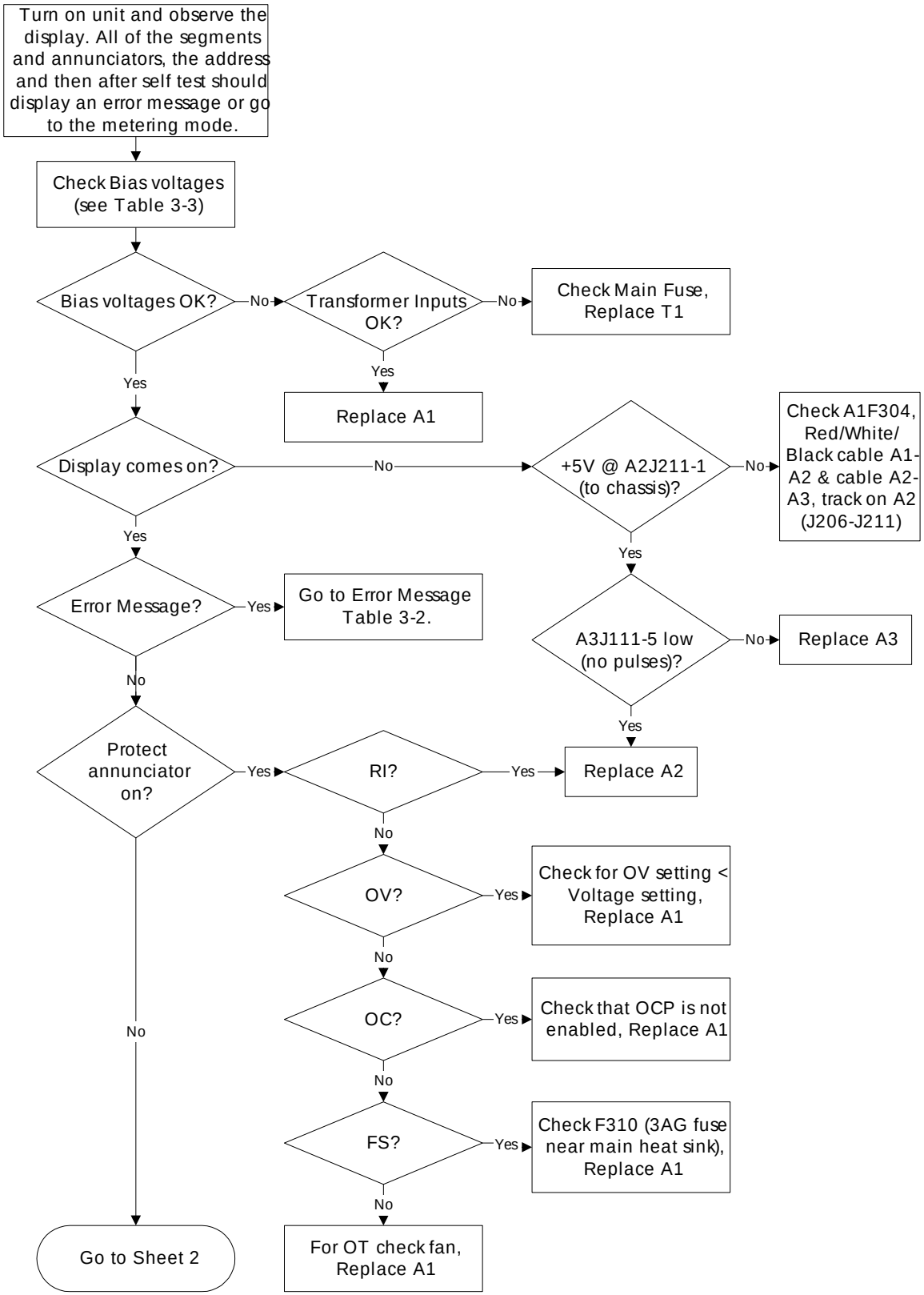

Figure 3-1 Sheet 1. Troubleshooting Flowchart

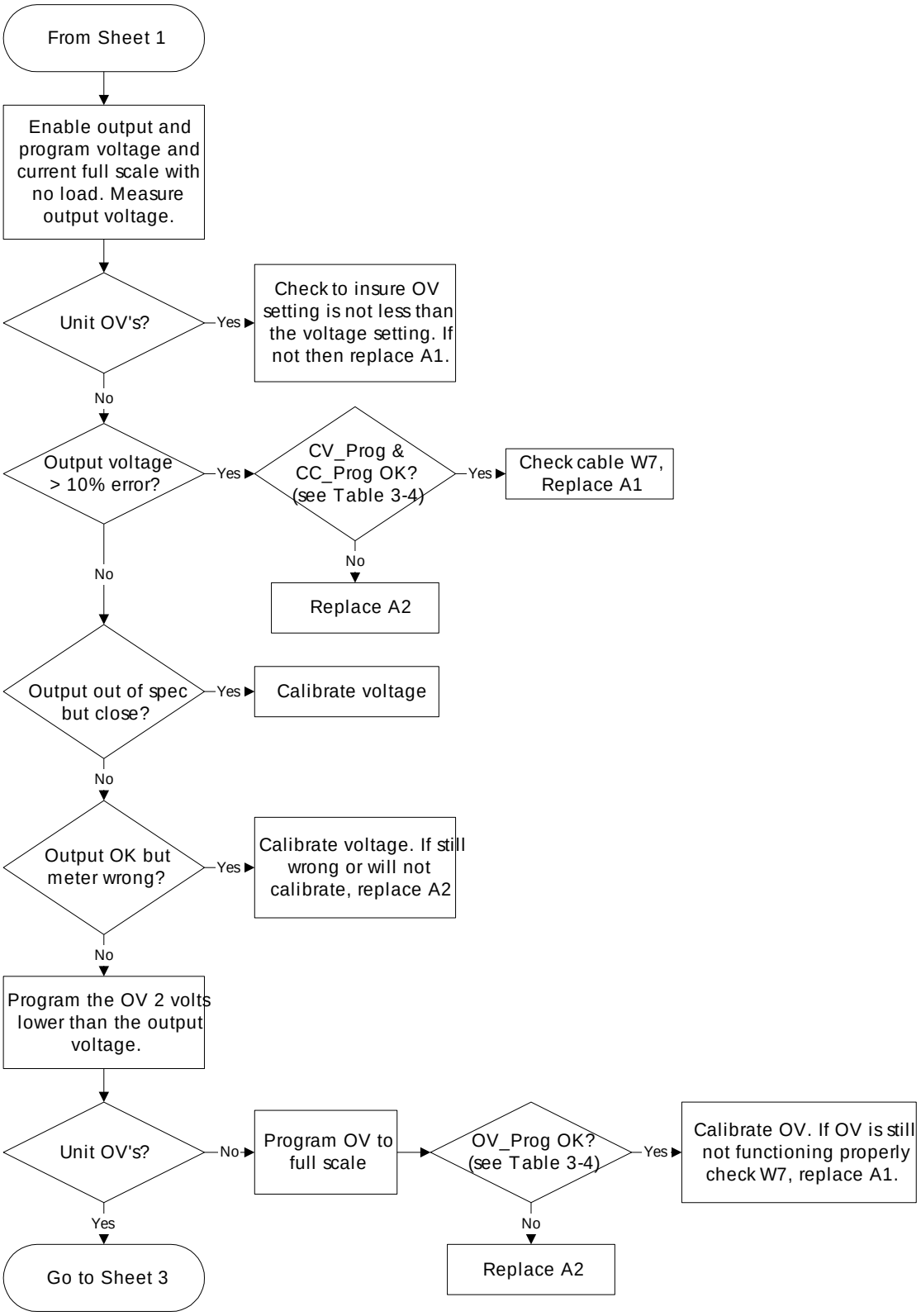

Figure 3-1 Sheet 2. Troubleshooting Flowchart

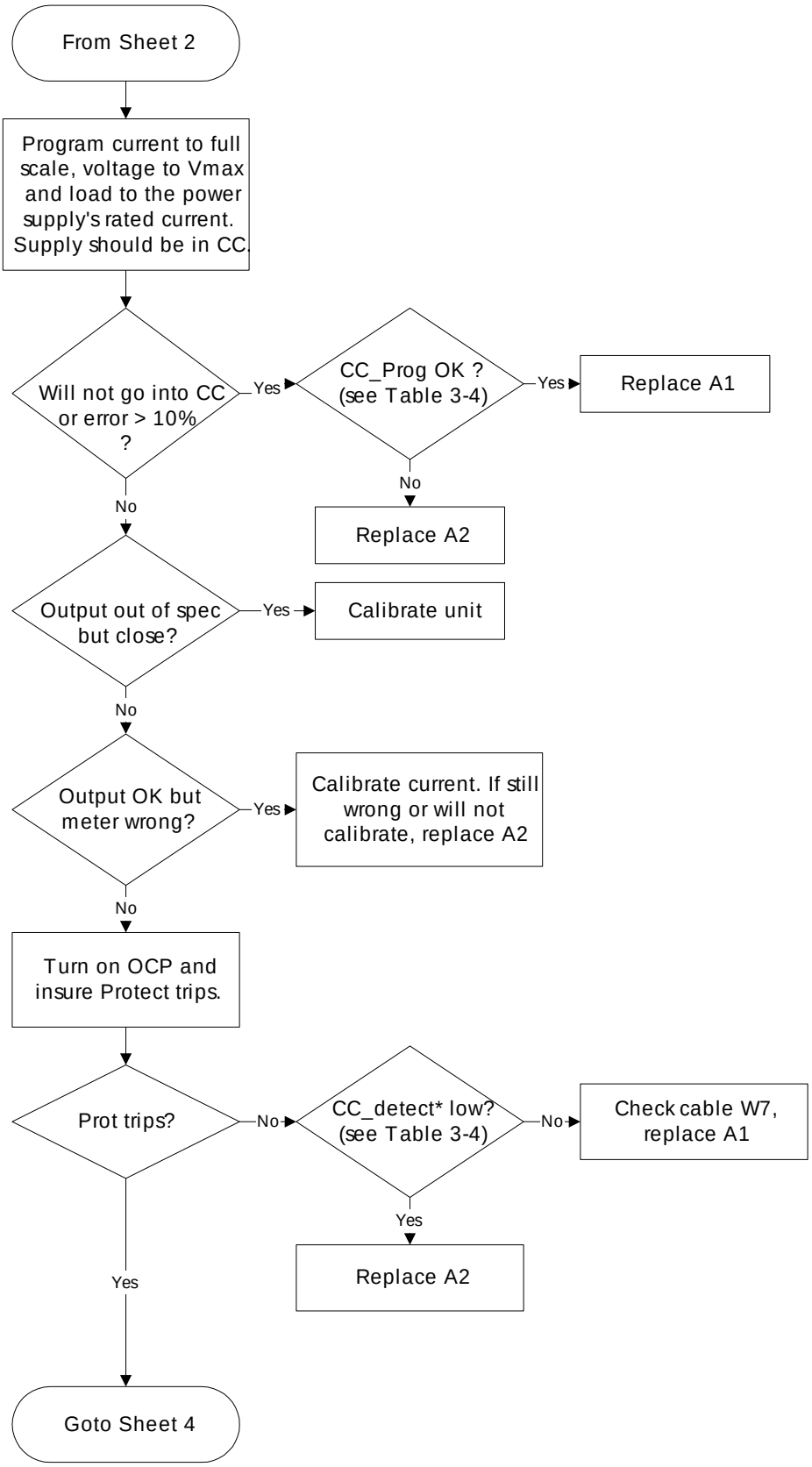

Figure 3-1 Sheet 3. Troubleshooting Flowchart

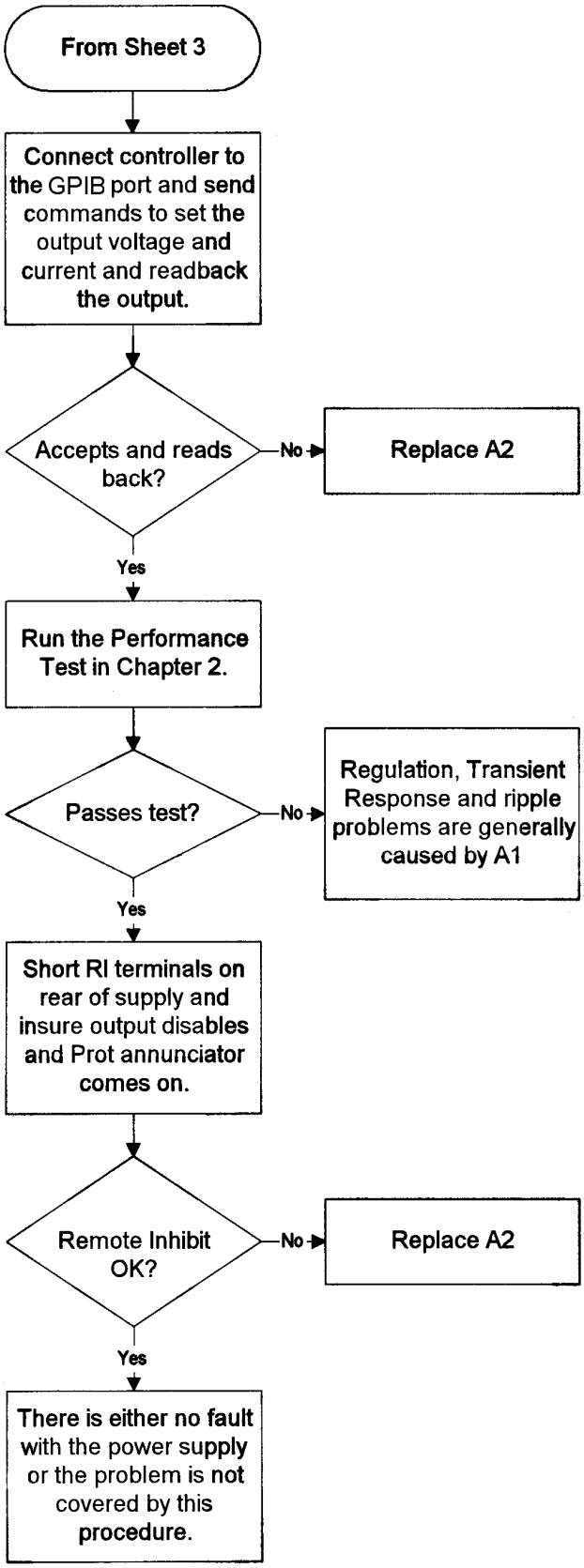

Figure 3-1 Sheet 4. Troubleshooting Flowchart

Specific Troubleshooting Procedures

Power-on Self-test Failures

The power-on self-test sequence tests most of the digital and DAC circuits. If the supply fails self-test, the display "ERR" annunciator will come on. You can then query the unit to find out what the error(s) are. When an error is detected, the output is not disabled so you can still attempt to program the supply to help troubleshoot the unit. Table 3-2 lists the self test errors and gives the probable cause for each error. Some errors may be caused by missing or wrong bias voltages from the A1 pc assembly. Before replacing either the A2 or A3 assemblies check the +5, +15 and –15 volt secondary biases in table 3-3.

NOTE: A partial self test is performed when the *TST? query is executed. Tests that interfere with normal interface operation or cause the output to change are not performed. The return value of *TST? will be zero if all tests pass, or the error code of the first test that failed. The power supply will continue normal operation if *TST? returns a non-zero value.

Table 3-2. Self-Test Error Codes/Messages

Error Code	Description	Probable Cause
E1	Checksum in Read-only Non-volatile ROM	A2 Interface Bd
E2	Checksum in Config Non-volatile ROM	A2 Interface Bd
E3	Checksum in Cal Non-volatile ROM	A2 Interface Bd
E4	Checksum in State Non-volatile ROM	A2 Interface Bd
E5	Checksum in RST Non-volatile ROM	A2 Interface Bd
E10	RAM test failed	A2 Interface Bd
E11	12 bit DAC test failed, 0 is written to DAC U241A and B, ADC U242 is checked for 133 +/- 7 counts	A2 Interface Bd
E12	12 bit DAC test failed, 4095 is written to DAC U241A and 0 to B, ADC U242 is checked for 71 +/- 7 counts	A2 Interface Bd
E13	12 bit DAC test failed, 0 is written to DAC U241A and 4095 to B, ADC U242 is checked for 71 +/- 7 counts	A2 Interface Bd
E14	12 bit DAC test failed, 4095 is written to DAC U241A and B, ADC U242 is checked for 10 +/- 7 counts	A2 Interface Bd
E15	8 bit DAC test failed, 10 and 240 are written to DAC U244, ADC U242 is checked for 10 and 240 +/- 7 counts	A2 Interface Bd
E80	Dig I/O test failed, SEC_PCLR written low and high, read back through Xilinx	A2 Interface Bd
E213	RS-232 input buffer overrun	A2 Interface Bd
E216	RS-232 framing error	A2 Interface Bd
E217	RS-232 parity error	A2 Interface Bd
E218	RS-232 UART input overrun	A2 Interface Bd

E220	Front Panel comm UART input overrun	A3 Front Panel/Display Bd
E221	Front Panel comm UART framing error	A3 Front Panel/Display Bd
E222	Front Panel comm UART parity error	A3 Front Panel/Display Bd
E223	Front Panel firmware input buffer overrun	A3 Front Panel/Display Bd

CV/CC Status Annunciators Troubleshooting

The CV/CC annunciators are particularly helpful when troubleshooting a unit with no output voltage or current. If the unit has passed self test the programming DAC circuits on the A2 circuit board are probably working properly. If one of the annunciators is on then the problem is in either the CV or CC control circuits located on the Main board A1. If UNR is indicated then neither the voltage nor the current circuits are in control and the problem would be in the driver or output regulator stages circuits, also on A1 but after the gating diodes, or the main power transformer.

Bias and Rail Voltages

Before troubleshooting any circuit check the bias and/or rail voltages to make sure that they are not the cause. Table 3-3 lists the bias and rail voltage test points for the A1 Main Control , A2 Interface, and the A3 Front Panel/Display boards. Unless otherwise noted, all voltages are measured with respect to secondary common (R473-3) with the output on and no load on the supply.

Table 3-3. Bias and Reference Voltages

Bias	**Test Point** (See Figure 6-1)	**Measurement**	**Transformer Input**
+Rail (Keysight 6631B)	A1 Main Heat Sink [1]	+20 V 10% (0.5V P/P)	18 Vac J302 pins 4-5 & 5-7
-Rail (Keysight 6631B)	A1 Q311 collector [1]	-8.5 V 10% (0.4V P/P)	7.9 Vac J302 pins 3-5 & 5-9
+5 V secondary	A1 R473 [2]	+5 V 4%	20 Vac J305 pins 1-2 & 2-3
+15 V secondary	A1 +C324 [2]	+15 V 5%	“
-15 V secondary	A1 D307 anode [2]	-15 V 5%	“
+5 V Interface	EA306 (red wire) [3]	+5 V 3%	11 Vac J303 pins 1-3
+5 V Interface (Unreg)	EB306 (white wire) [3]	+5 V 3%	“

[1] Measured with respect to - Output at nominal ac input line voltage
[2] Measured with reference to secondary common (R473 current sampling resistor, front)
[3] Measured with reference to Interface Ground (EC306 black wire)

J207 Voltage Measurements

Cable W7 connects the A1 Main Board Assembly J307 to the A2 Interface Assembly J207. Table 3-4 provides a listing of the voltages between these assemblies. Flow charts in Figure 3-1 will refer to several of these voltages to determine if they are outside the normal range.

Table 3-4. Voltage Measurements at J207 (A2 Interface to A1 Main board)

A2J207 Pin #	Signal Name	CV Mode Full Scale Voltage No Load	CC Mode Full Scale Voltage Full Load	Signal Origin
1	PM_INHIBIT (Enabled)	0	0	A2
2	OV_SCR*	+5	+5	A2
3	OV_PROG	+3.9	+3.9	A2
4	FAN_PROG	+2.8	+3.8	A2
5	OV_DETECT*	+5	+5	A1
6	SW_POS (Norm)	+5	+5	A1
7	RANGE_SELECT (High)	0	0	A2
8	OS_TRIM_NEG (COMP) OS_TRIM_NEG (SCPI)	+1.7 +4.0	+1.7 +4.0	A2
9	+5Vs	+5	+5	A2
10	COMMON	0	0	A1
11	COMMON	0	0	A1
12	+15Vs	+15	+15	A1
13	-15Vs	-15	-15	A1
14	HS_THERM (@25C)	+2.5	+2.5	A1
15	FUSE	+2.4	+2.6	A1
16	IMON_H	0	+3.5	A1
17	IMON_L IMON_L (@20mA Out)	0 +4.8	+14.7 +4.8	A1
18	IMON_P	0	0	A1
19	VMON	+4.8	+4.8	A1
20	COMMON	0	0	A1
21	COMMON	0	0	A1
22	COMMON	0	0	A1
23	COMMON	0	0	A1
24	CV_PROG	-4.8	-4.8	A2
25	CC_PROG	-4.8	-4.8	A2
26	CC_DETECT*	+5	0	A1
27	CCN_DETECT*	+5	+5	A1
28	CV_DETECT*	0	+5	A1

Manual Fan Speed Control

Under some circumstances such as testing acoustical devices where the fan noise would interfere with the test, it would be advantageous to reduce the fan speed. If the test requires a very light load, the ambient temperature is low and the duration of the test is short, the fan speed may be temporarily reduced. The turn-on default is "Automatic" so this procedure must be performed, as needed, every time the line voltage is turned on. To manually control the fan speed:

a. Simultaneously depress the "0" and "9" keys. EEINIT <model> will be displayed.

b. Using the Up/Down annunciator keys select FAN:MODE<AUTO.>.

c. Using the Up/Down arrows select FAN:MODE <MAN>

d. Press "Enter"

e. Simultaneously depress the "0" and "9" keys. EEINIT <model> will be displayed.

f. Using the Up/Down annunciator keys select FAN:SPEED <data>

g. Press "Enter Number".

h. Enter the desired speed (numeric entry range is 0 to 100%)

i. Press "Enter"

Disabling Protection Features

Except for overvoltage protection, the power supply's protection features may be disabled. This is not recommended as a normal operating condition but is helpful under some circumstances such as troubleshooting. The turn-on default is "NO-PROTECT OFF" (protection enabled) so this procedure must be performed, as needed, every time the line voltage is turned on. To disable the protection:

a. Simultaneously depress the "0" and "9" keys. EEINIT <model> will be displayed.

b. Using the Up/Down annunciator keys select NO-PROTECT <OFF>.

c. Using the Up/Down arrows select NO-PROTECT <ON>.

d. Press "Enter"

Post-repair Calibration

Calibration is required annually and whenever certain components are replaced. If either of the circuit boards listed below are replaced, the supply must be re-calibrated as described in Appendix B of the User's Guide.

a. A1 Control Board

b. A2 Interface Board

If the Interface board A2 is replaced, the supply must be initialized first (see "Initialization" later in this chapter) and then be calibrated.

Inhibit Calibration Switch

If "CAL DENIED" appears on the display when calibration is attempted, or if error code 401 occurs when calibrating over the GPIB, the internal INHIBIT CAL switch has been set. This switch setting prevents unauthorized or inadvertent power supply calibration. You must reset this switch in order to calibrate the supply.

This four-section switch, S201, is located on the A2 Interface board near the GPIB connector. The switch has 2 functions related to calibration. One is Inhibit Calibration. With this switch set the supply will not respond to calibration commands, thus providing security against unauthorized calibration. The other switch allows you to bypass the password in case it is forgotten.

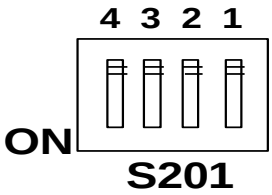

	Switch 3	Switch 4
Normal	Off	Off
Clear Password	Off	On
Inhibit Calibration	On	Off

Calibration Password

In order to enter the calibration mode, you must use the correct password as described in Appendix B of the Operating Manual. As shipped from the factory, the number 0 (zero) is the password. If you use an incorrect password, "OUT OF RANGE" will appear on the display for front panel calibration (or error code 402 occurs for GPIB calibration) and the calibration mode will not be enabled.

If you have changed the password and have forgotten it, you can set the configuration switch on A2 Interface board to bypass the password. See "Calibration Switch" paragraph above.

Initialization

The dc power supply's GPIB address and model number as well as other constants which are required to program and calibrate the supply are stored in a EEPROM on the A2 Interface board. The Interface board also contains references and other components that will affect the alignment of the supply. If the Interface board is replaced, the supply must be reinitialized and calibrated. To initialize the power supply:

a. Enable the Calibration mode

b. Simultaneously depress the "0" and "9" keys.

c. Using the Up/Down arrows select the appropriate model number

d. Press "Enter"

The dc power supply will go through the turn-on self test sequence. It is now re-initialized and must be calibrated. See Appendix A of the User's Guide for the calibration procedure.

ROM Upgrade

Identifying the Firmware

You can use the *IDN? query to identify the revision of the supply's firmware. The query will readback the revisions of the Primary Interface ROM located on the A2 Interface board. The manufacturer and model number of the supply are also returned. The following is a sample program:

```
10   ALLOCATE L$[52]
20   OUTPUT 705;"*IDN?"
30   ENTER 705;L$
40   DISP L$
50   END
```

The computer will display the manufacturer's name, the model number, a "0," and then the firmware revision. Example: "HEWLETT-PACKARD,6631B,0,A.00.01". The revision level of the ROM can also be found on the label affixed to the physical IC chip itself.

Upgrade Procedure

If the Interface board ROM is upgraded you can re-initialize the supply without affecting the calibration.

a. Enable the Calibration mode.

b. Simultaneously depress the "0" and "9" keys. EEINIT <model> will be displayed.

c. Using the Up/Down annunciator keys select ROMUPD <model>.

d. Using the Up/Down arrows select the appropriate model number.

e. Press "Enter".

The supply will go through the turn-on self test sequence and return to the power supply metering mode.

Disassembly Procedures

The following paragraphs provide instructions on how to disassemble various components of the dc power supply. Once disassembled, the components can be reassembled by performing the disassembly instructions in reverse order. Figure 3-2 shows the location of the major components of the unit.

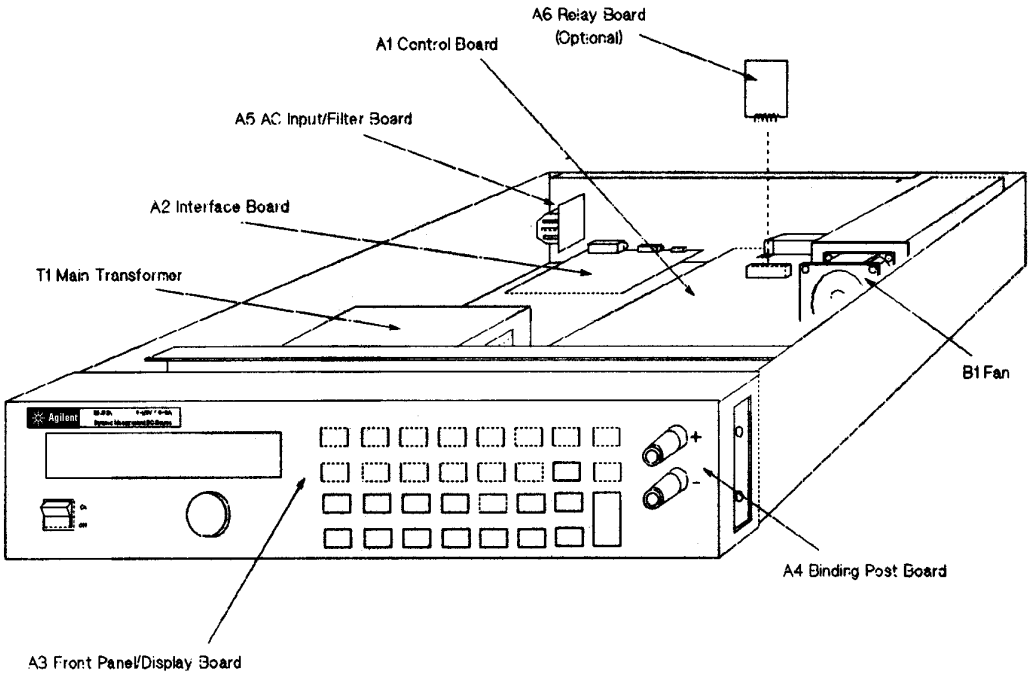

Figure 3-2. Component Location

WARNING: **SHOCK HAZARD.** To avoid the possibility of personal injury, turn off AC power and disconnect the line cord before removing the top cover. Disconnect the GPIB cable and any loads, and remote sense leads before attempting disassembly.

CAUTION: Most of the attaching hardware is metric. Use of other types of fasteners will damage threaded inserts. Refer to the list of required tools when performing disassembly and replacement.

List of Required Tools

a. 2PT Pozidriv screwdrivers.

b. T10 and T15 Torx screwdrivers.

c. Hex drivers: 7 mm for GPIB connector,
3/16" for RS-232 connector,
1/4" for front panel binding posts

d. Long nose pliers.

e. Antistatic wrist discharge strap.

Cover, Removal and Replacement

a. Using a 2TP Pozi screwdriver, unscrew the two screws that hold the carrying straps to the power supply, and then remove the two screws from the opposite side of the case.

b. To remove the cover, first spread the bottom rear of the cover slightly and push from the front panel

c. Slide the cover backward until it clears the rear of the power supply.

A2 Interface Board, Removal and Replacement

To remove the Interface Board, proceed as follows:

a. Remove the cover of the power supply as described under, "Cover Removal and Replacement."

b. Remove the two 7 mm and 3/16 inch hex screws that hold the GPIB and RS-232 connectors in place.

c. Unplug the cable from J206. Depress the release button located at the end of the connector where the wires enter the housing.

d. Unplug the flat cables. Note the position of the conductive side for reinstallation. Connectors release the cable by pulling out end tabs as shown by the arrows in the following figure.

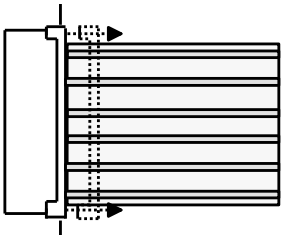

e. Lift the board off of the snap-in standoffs.

f. To reinstall the Interface board, perform the above steps in reverse order.

Front Panel Assembly, Removal and Replacement

This procedure removes the front panel assembly from the dc power supply.

a. Remove the Power Supply Cover as described earlier in, "Top Cover Removal and Replacement."

b. Disconnect the cable between the Front Panel board and the Interface board at the Interface board.

c. Carefully peel off the vinyl trim strips on each side of the front panel that cover the front panel screws.

d. Using a Torx T10 driver remove the two screws (one on each side) that hold the front panel assembly to the chassis.

e. Slide the Front Panel assembly forward and away from the chassis to access the S1 power switch.

f. Disconnect the wires going to the S1 switch assembly. For reassembly, make a note of the color coding of the wires and the pins to which they are connected.

g . If the supply has front panel binding posts, unplug the cable from the binding post connector and use a Torx T15 driver to remove the screw connecting the ground wire to the chassis.

h. You can now remove the front panel assembly from the supply.

i. To reinstall the Front Panel Assembly, perform the above steps in reverse order.

S1 Line Switch, Removal and Replacement

a. First remove the front panel assembly as described under “Front Panel Assembly, Removal and Replacement.”

b. Release the switch from the front panel by pressing the locking tabs inward against the body of the switch and pushing the switch out of its opening.

NOTE: When reinstalling the switch, make sure that the letter “O” is facing up when the switch is installed in its opening.

A3 Front Panel Board, Removal and Replacement

First remove the front panel assembly as described under, "Front Panel Assembly, Removal and Replacement." Once you have access to the front panel board perform these steps:

a. Remove the RPG knob by pulling it away from the front panel.

b. Use a Torx T10 driver to remove the screw that secures the board to the front panel assembly.

c. Slide the board to the left to disengage the holding clips, then lift it out.

d. To reinstall the Front Panel board, perform the above steps in reverse order.

A1 Main Control Board

a. Remove the top cover and the A2 Interface board as previously described.

b. Disconnect all cables going to connectors on the main control board.

NOTE: Be sure to note the position and orientation of all cables prior to removal so that no mistake is made later when reinstalling these cables.

---

c. If your power supply is equipped with a relay option board, remove the Torx T10 screw that holds the relay board bracket.

d. Remove four Torx T15 screws that secure the main control board to the chassis.

e. Slide the main board towards the front panel to release it from chassis mounted standoffs and then lift the board out of the chassis.

T1 Power Transformer, Removal and Replacement

To remove the power transformer, the front panel assembly must first be removed to gain access to the bracket screws that hold the transformer in place.

a. Remove the three Torx T10 screws securing the rear of the transformer bracket to the bottom of the chassis and the two Torx T10 screws securing the front of the transformer to the chassis.

b. Use long nose pliers to disconnect all wires going to the transformer terminals.

c. Lift the transformer out of the chassis.

NOTE: The AC power connections at the transformer primary are line voltage dependent. Refer to Figure 3-3 subsequent reconnection.

Line Voltage Wiring

Figure 3-3 illustrates the primary wiring configuration of the power transformer for various ac line voltages. Use long nose pliers to disconnect the wires going to the transformer terminals.

NOTE: Install the correct fuse when changing the ac line voltage from a previous setting:
for 110/120 Vac: 4 AM, Keysight p/n 2110-0055;
for 220/230 Vac: 2 AM, Keysight p/n 2110-0002

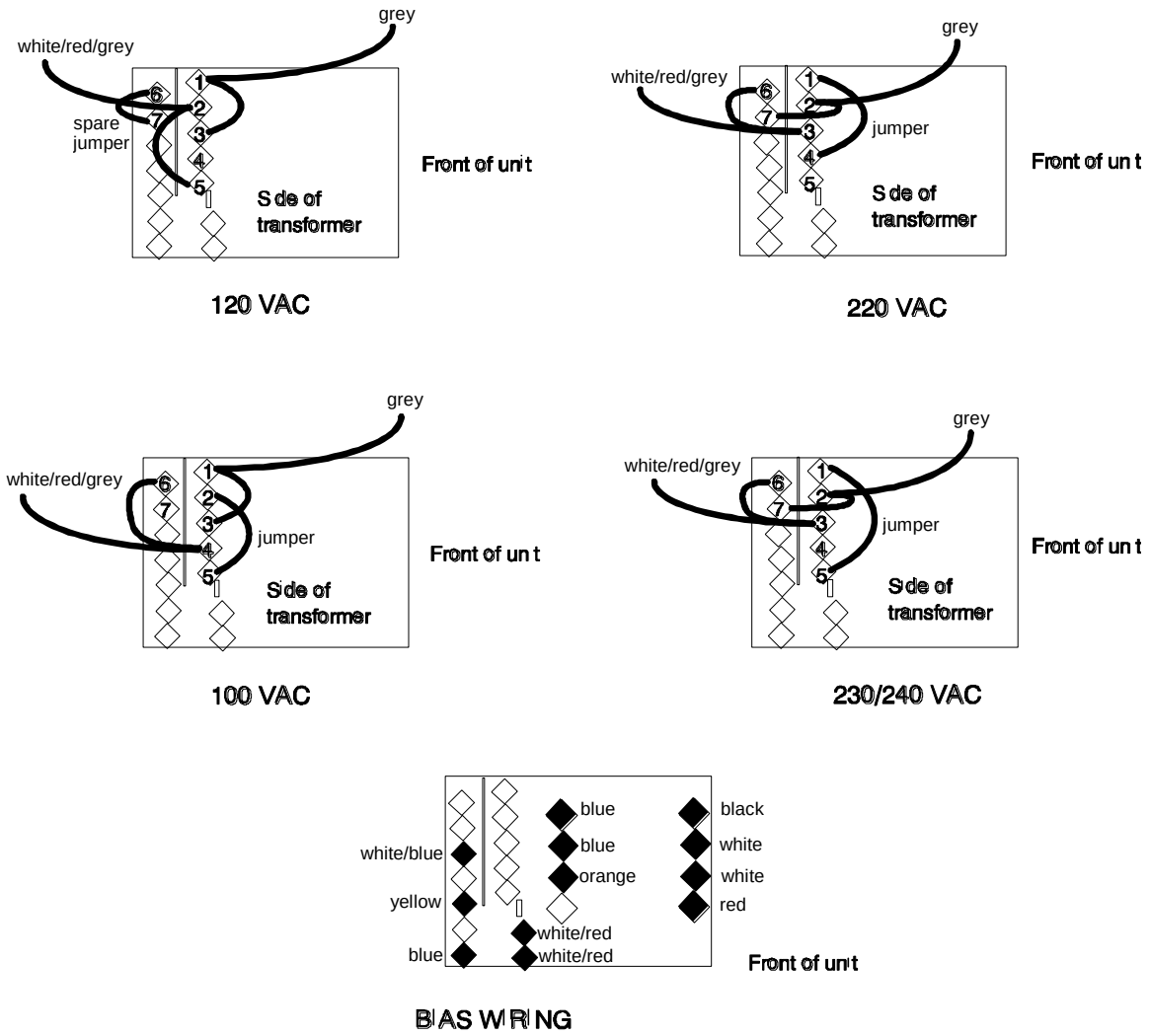

Figure 3-3. Transformer Wiring

4

Principles of Operation

Introduction

This section describes the different functional circuits used in the dc power supply models covered in this manual. First, the I/O external signals that connect to the Keysight power supply are described. Next, the overall block diagrams for the dc power supply are described in detail.

The simplified block diagrams found in Chapter 6 show the major circuits of the dc power supply as well as the signals between circuits. They also show the reference designations of some of the components in the functional circuit.

I/O Interface Signals

Table 4-1 describes the interface signals between the power supply and the end user (or other external circuits and devices).

Table 4-1. Power Supply Interface signals

Connector	Signal	Description
Front panel outputs	+OUT -OUT	Positive DC output voltage Negative DC voltage (or return)
Rear panel output/sense screw terminals	+OUT -OUT + sense - sense common	Positive DC output voltage Negative DC voltage (or return) +OUT sensing terminal -OUT sensing terminal connected to ground conductor
INH/FLT connector	pin 1 pin 2 pin 3 pin 4	FLT/INH mode[1] / Digital I/O mode FLT output / OUT 0 FLT Common / OUT 1 INH Input / IN 2/OUT 2 INH Common / Common [1]as-shipped configuration
RS-232 connector	XON-XOFF RTS-CTS DTR-DSR NONE	uses ASCII control codes DC# and DC1 uses Request-To-Send and Clear-To-Send lines uses Data-Terminal-Ready and Data-Set-Ready lines there is no flow control
GPIB connector	GPIB /IEEE 488	Provides the interface to an external GPIB controller
Ac input connector	ac mains	Can be 100 Vac, 120 Vac, 220 Vac or 240 Vac Input

A3 Front Panel Circuits

As shown in Figure 6-3, the supply's front panel assembly circuit board contains a keypad, a liquid crystal display (LCD), and a rotary control (RPG) for the output voltage and current. With the exception of the RPG (A3G1), the A3 Front Panel board is an assembly-level replaceable part. A separate front panel binding post board is also included on the unit. It is also available as an assembly-level replaceable part.

The A3 front panel board contains microprocessor circuits, which decode and execute all keypad and RPG commands that are transferred to the power supply output via the serial I/O port to the primary interface circuits on the A2 interface board. The front panel microprocessor circuits also process power supply measurement and status data received on the serial I/O port. This data is displayed on the LCD.

A2 Interface Circuits

The circuits on the A2 interface board provide the interface between the GPIB interface, RS-232 interface, and front panel interface and the dc power supply. Communication between the power supply and a GPIB controller is processed by the GPIB interface and the primary microprocessor circuits on the A2 board. The A2 Interface board is assembly-level replaceable; it contains no user-replaceable parts.

With the exception of the front panel microprocessor, all digital circuits, analog-to-digital converters (ADC) and digital-to-analog converters (DAC) in the dc power supply are located on the A2 Interface board. All control signals between the A2 interface board and the A1 main board are either analog or digital level signals.

Primary Interface

The primary microprocessor circuits (DSP, ROM, and RAM chips) decode and execute all instructions and control all data transfers between the controller and the secondary interface. The primary microprocessor circuits also processes measurement and status data received from the secondary interface.

A Dual Asynchronous Control chip on the A2 board converts the RS-232, RI/DFI, and front panel data into the primary microprocessor's 8-bit data format. The serial data is transferred between the primary interface and the secondary interface via a serial bus and optical isolator chips. These chips isolate the primary interface circuits (referenced to earth ground) from the secondary interface circuits (referenced to output common).

Secondary Interface

The secondary interface circuits include a programmed logic array, EEPROM, boot-ROM, 8 and 12-bit DAC circuits, and 8 and 16-bit ADC circuits. The programmed logic array translates the serial data received from the primary interface into a corresponding digital signal for the appropriate DAC/ADC circuits. The logic array is also connected directly to four DAC/ADC circuits. Under control of the logic array, the selected DAC converts the data on the bus into an analog signal. Conversely, the selected ADC converts the analog signals from the A1 board into a digital signal.

The logic array also directly receives status information from the A1 main board via three level-sensitive signal lines, which inform the array of the following operating conditions: constant voltage mode (CV_Detect*), constant current mode (CC_Detect*), negative current mode (CCN_Detect*), and overvoltage (OV_Detect*). The PM_Inhibit control signal is used to shut down the bias voltage to the

output stages and keep the power supply output off. The OV_SCR* control signal is used to fire the SCR and keep the power supply output off when an overvoltage condition has occurred.

The EEPROM (electrically erasable programmable read-only memory) chip on the A2 interface board stores a variety of data and configuration information. This information includes calibration constants, GPIB address, present programming language, and model-dependent data, such as the minimum and maximum values of voltage and current. One of the EEPROM storage locations holds a checksum value which is used to verify the integrity of the EEPROM data. Access to the calibration data in the EEPROM is controlled by the combination of a password and switch settings on A2S201, located on A2 interface board (See Chapter 3 "Inhibit Calibration Switch").

The Dual 12-bit DAC converts the programmed value of voltage and current on the bus into the CV_Prog and CC_Prog signals, which are sent to the CV control circuits in order to control the magnitude of the output voltage in the CV mode and output current in CC mode. The CV_Prog and CC_Prog signals are in the 0 to -5 V range, which corresponds to the zero to full-scale output ratings of the dc power supply.

The Quad 8-bit DAC converts programmed information for the following circuits into analog format: negative offset trim (OS_Trim_Neg), overvoltage setting (OV_Prog), current measurement range select (Range_Select), and fan speed programming (Fan_Prog). The OS_Trim_Neg signal allows the negative current control circuit to be calibrated at zero. The OV_Prog signal is applied to the OV detect circuit, which compares the programmed overvoltage setting with the actual output voltage. The Range_Select signal selects either the high or the low (20mA) measurement range. The Fan_Prog signal is applied to the fan speed control circuit in order to speed up the fan as temperature increases, and to slow the fan speed down as temperature decreases.

The 16-bit ADC in conjunction with a 4x1 multiplexer returns data from the following measurement signals to the logic array: monitored output voltage (VMon), monitored high-range current (Imon_H), monitored low-range current (Imon_L), and monitored peak current (Imon_P). All measurement signals are in the range of 0 to +5V, which corresponds to the zero to full-scale readback capability of the dc power supply.

The 8-channel, 8-bit ADC returns the following signals to the logic array: high-range output current (Imon_H), high range negative current (Imon_H-), overvoltage (V_Mon), ambient temperature (Temp_Amb), heatsink temperature (HS_Therm), and output fuse state (Fuse). Five of these signals are for fan control. The logic array varies the Fan_Prog signal depending upon the ambient temperature, the heatsink temperature, and the present output voltage and current. The Fuse signal informs the logic array if the output fuse (F300) is open.

A1 Main Board Circuits

Rail and Bias Circuits

Figure 6-4 shows the transformer, positive and negative output rails and primary and secondary bias circuits. All bias circuits are located on the A1 pc board. Bias voltage test points are shown in table 6-1 and transformer wiring diagrams are shown in Figure 3-3.

The primary bias circuits are referenced to chassis (earth) ground. They provide the bias for the GPIB, RS232 and RI/DFI interfaces, the interface micro-processor circuits and the front panel.
The secondary bias circuits are referenced to the secondary (output) common and are isolated from chassis ground. They provide the bias for the amplifier and output circuits located on the A1 pc board. They also provide the bias for the Logic Array, EEPROM, DAC and ADC circuits and the secondary side of the Opto-isolators on A2.

Output Power and Control Circuits

As shown in Figure 6-2, the power circuits consist of: input power rectifiers and filter, current-monitoring resistors, an output stage, a voltage gain stage, an overvoltage SCR, and an output filter.

The ac input rectifier and filter converts ac input to a dc level. The output stage regulates this dc level at the output of the power supply. The output stage has up to four parallel NPN transistors mounted on a heatsink and connected between the +Rail and the +Output. These transistors are driven to conduct by a positive-going signal from driver Q303 (located in the voltage gain stage). The output stage also has up to four parallel PNP transistors mounted on a heatsink and connected between the +Rail and the -Rail. These transistors are driven to conduct by a negative-going signal from driver Q304 (located in the voltage gain stage).

The voltage gain stage is controlled by a signal from the control circuits. A positive-going signal to the voltage gain stage makes the output more positive. A negative-going signal to the voltage gain stage makes the output more negative. The Turn-on control signal to the voltage gain stage simply keeps the output of the unit turned off for about 100 milliseconds at power turn-on while the microprocessor is initializing the unit.

Two current shunt resistors monitor the output current. RmHi (R473) monitors the high current range; RmLo (R403) monitors the low current range. Shunt clamps, connected in parallel across RmLo, turn on at approximately 25 mA to limit the voltage drop at high currents. The Range_Select signal sets the level at which switching occurs. The output of the current monitor drives the level.

The SCR, connected across the output, will fire and short the output when an overvoltage condition is detected. The SCR is controlled by the OV_SCR* signal from the crowbar control circuit (described in the next section).

The output filter capacitor provides additional filtering of the dc output.

Control Circuits

As shown in Figure 6-2, the control circuits consist of the CV/CC controls, output voltage/current monitor, bias supplies, and SCR control.

The CV/CC control circuits provide a CV control loop, a positive CC control loop, and a negative CC control loop. For any value of load resistance, the supply must act either as a constant voltage (CV) or as a constant current (CC) supply. Transfer between these modes is accomplished automatically by the CV/CC control circuit at a value of load resistance equal to the ratio of the programmed voltage value to the programmed current value. The negative CC control circuit is activated when a current source such as another power supply is connected across the output terminals and its voltage is greater than the programmed voltage. A low level CV_Detect*, CC_Detect*, or CCN_Detect* signal is returned to the secondary interface to indicate that the corresponding mode is in effect.

When the CV loop is in control, diode D328 is conducting current. Voltage regulation is accomplished by comparing the programmed voltage signal CV_Prog with the output voltage monitor signal Vmon. The Vmon signal is in the 0 to +5 V range, which corresponds to the zero to full-scale output voltage range of the supply. If the output voltage exceeds the programmed voltage, Vmon goes high and produces a more negative-going CV signal, which reduces the input to the voltage gain stage and lowers the output voltage. Conversely, if the output voltage is less than the programmed voltage, Vmon goes low and produces a more positive-going CV signal, which increases the input to the voltage gain stage and raises the output voltage. Depending upon the position of the sense switch, the output voltage is either monitored at the supply's output terminals (local), or at the load (remote) using the +S and -S terminals with remote sense leads connected to the load. If the output voltage goes higher than the programmed value, the unit starts sinking current to reduce the output voltage.

When the CC loop is in control, diode D325 is conducting current. Current regulation is accomplished by comparing the programmed current signal CC_Prog with the output current monitor signal Imon_H. The Imon_H signal is produced by measuring the voltage drop across the current monitoring resistor and is in the 0 to +5 V range, which corresponds to the zero to full-scale output current range of the supply. If the output current exceeds the programmed current, Imon_H goes high and produces a more negative going CC signal, which reduces the input to the voltage gain stage and lowers the output current. Conversely, if the output current is less than the programmed current, Imon_H goes low and produces a more positive-going CC signal, which increases the input to the voltage gain stage and raises the output current.

When the supply is sinking current, only the CV control circuit or the CCN control circuit can be active. In this case, the supply is acting as a load instead of a power source and will attempt to pull the output voltage down by drawing off current from the externally applied source. The current that will be drawn from the externally supplied source is determined by the CC_Prog signal. When the current required to reduce the voltage is less than the programmed current value, the CV control circuit is active and regulates the output voltage. When the current required to reduce the voltage exceeds the programmed current value, the CCN control circuit is active. It regulates the output current by comparing the negative Imon_H signal to the inverted CC_Prog signal.

During operation, a PM_Inhibit signal will cause the turn-on control to turn off the bias to the voltage gain stage and shut down the output if any of the following occur:

The output is programmed off.

An overvoltage condition is detected (OV_Detect* signal is received).

The line voltage falls below 90 volts (approximately).

Current readback is provided by three separate circuits. The previously discussed high range current signal (Imon_H) returns the high range current measurement. When the unit is operating in the low current readback mode, a separate low range current shunt and amplifier provides low-current readback via the Imon_L signal. The Range_Select signal drives shunt clamps Q304 and Q305, which clamp the voltage across RmLo to approximately 1.8 V. A third current readback circuit is available on the Keysight 66332A unit. It consists of a high bandwidth current amplifier that returns dynamic current measurements from the output filter capacitor via the Imon_P signal. Note that the Imon_H and the Imon_P signal are combined to return the actual output current measurement.

An overvoltage detect circuit compares the output voltage to the programmed overvoltage setting. When the output exceeds the programmed setting, the OV_Detect* signal goes low, which informs the logic array that an OV condition has occurred. The crowbar control circuit is enabled when the OV_SCR* signal is received. When an overvoltage condition occurs, the SCR control circuit generates the OV signal, which causes the following actions to occur:

1. The SCR fires, shorting the supply's output.
2. The microprocessor circuits are notified of the OV condition (OV_Detect* is low) in order to program the output off, turn off the gain stage bias, and update the status of the unit.
3. When a output protection clear command is executed, the microprocessor circuits resets the OV circuits, turns on the gain stage bias, and programs the output to its previous level.

The fan driver control circuit provides the DC voltage to operate the cooling fan. The Fan_Prog signal from the secondary interface circuit varies this voltage according to the ambient and heatsink temperature as well as the output voltage and current of the supply.

5

Replaceable Parts List

Introduction

This section lists the replaceable parts for Keysight model 6631B power supply. Refer to Figures 5-1 for the location of mechanical parts with the reference designators MP. Refer to the board location diagrams in Chapter 6 for the location of electrical parts.

Table 5-1. Chassis, Electrical

Designator	Part_Number	Qty	Description
A1	06631-61024	1	Control PCA, SMT, Tested
A1F300	2110-0712	1	Fuse (Submin), 4AM, 125V
A1F301	2110-0712	1	Fuse (Submin), 4AM, 125V
A1F304	2110-0699	1	Fuse (Submin), 5AM, 125V
A1F310	2110-0025	1	Fuse (Output), 15AM, 32V
A2	5063-3429	1	Interface PCA, Tested
A3	5063-3432	1	Front Panel PCA, Tested
A3G1	0960-0912	1	Rotary Pulse Generator
A4	5063-3406	1	Binding Post PCA
A5	5063-3433	1	AC Input/RFI PCA
B1	06632-60002	1	Fan Assembly
F500	2110-0055	1	Fuse, 4AM, 250V (115Vac input)
F500	2110-0002	1	Fuse, 2AM, 250V (230Vac input)
T1	9100-5635	1	Main Transformer
W1	06612-80001	1	Cable (A5 to S1)
W2	06612-80002	1	Cable (S1 to T1)
W3	06632-80004	1	Cable (T1 to A1J303)
W4	06631-60052	1	Cable (T1 to A1 J304/J305)
W5	06612-80003	1	T1 Jumper
W6	5080-2452	1	Cable (A1 to A2 J206)
W7	5080-2448	1	Cable (A1 J307 to A2 J207)
W11	5080-2457	1	Cable (A2 J211 to A3 J111)
W15	06612-80010	1	Cable (A1 J314 to A4 J615)
	8120-4383	1	Line Cord, Standard (Option 903)
	8120-1350	1	Line Cord, Option 900
	8120-1369	1	Line Cord, Option 901
	8120-1689	1	Line Cord, Option 902
	8120-0698	1	Line Cord, Option 904
	8120-2104	1	Line Cord, Option 906
	8120-2956	1	Line Cord, Option 912
	8120-4211	1	Line Cord, Option 917
	8120-4753	1	Line Cord, Option 918

Table 5-2. Chassis, Mechanical

Designator	Part Number	Qty	Description
MP1	06612-00002	1	Chassis
MP2	5063-3426	1	Front Panel Assy, Std unit
MP2	5063-3443	1	Front Panel Assy, Option 020
MP3	0370-3238	1	Knob, 6mm
MP4	06612-40001	1	Keypad
MP5	1510-0091	2	Binding Post, Single, Red
MP6	06631-80001	1	Nameplate (Keysight 6631B)
MP7	5001-9847	1	Top Cover
MP8	5041-8819	1	Strap Handle Cap, front
MP9	5041-8820	1	Strap Handle Cap, rear
MP10	5062-3702	1	Strap Handle
MP11	06624-20007	1	Barrier Block Cover
MP12	1252-1488	1	Terminal Block, 4 Position, RI/DFI
MP13	06611-40006	1	Fan Spacer (G10)
MP16	0515-0433	7	Screw M4x0.7x8mm, Torx T15, Pan head, Conical washer
MP19	06612-80004	1	Rear Label
MP20	5041-8801	4	Foot
MP21	0515-1117	2	Screw M5x0.8x10mm, Pozi, Flat head, Patch Lock
MP22	0515-1132	2	Screw M5x0.8x10mm Pozi, Pan head, Patch Lock
MP24	06612-00004	1	Binding Post Plate
MP25	2950-0144	2	Nut, Hex 3/8-32 Nylon
MP26	0590-0305	2	Nut, Hex w/Lockwasher 6-32
MP27	5001-0538	2	Side Trim
MP28	0380-0644	2	Stud Mounted Standoff
MP29	2190-0034	2	Washer, Helical Lock #10
MP30	3050-0849	2	Washer, Flat #10
MP31	5001-6788	1	Transformer Bracket
MP32	5001-6787	1	Transformer Shim
MP33	1400-1281	2	Cable Clip
MP34	0515-0380	10	Screw M4x0.7x10mm, Torx T15, Pan head, conical washer
MP36	0515-2535	4	Screw, M3x0.5x8mm, Torx T10, Pan head, Thread Rolling
MP37	0515-0374	6	Screw M3x0.5x10mm, Torx T10, Pan head, conical washer
MP38	0535-0031	2	Nut, Hex w/lockwasher, M3x0.5
MP39	0460-2362	1	Foam Pad
MP40	0380-2086	2	Standoff, snap-in
MP41	8160-0916	2	RFI Clip
MP42	1252-3056	2	Screw Lock Kit (ref RS232 Connector)
	5962-8196	1	User’s Guide
	5962-8198	1	Programming Guide

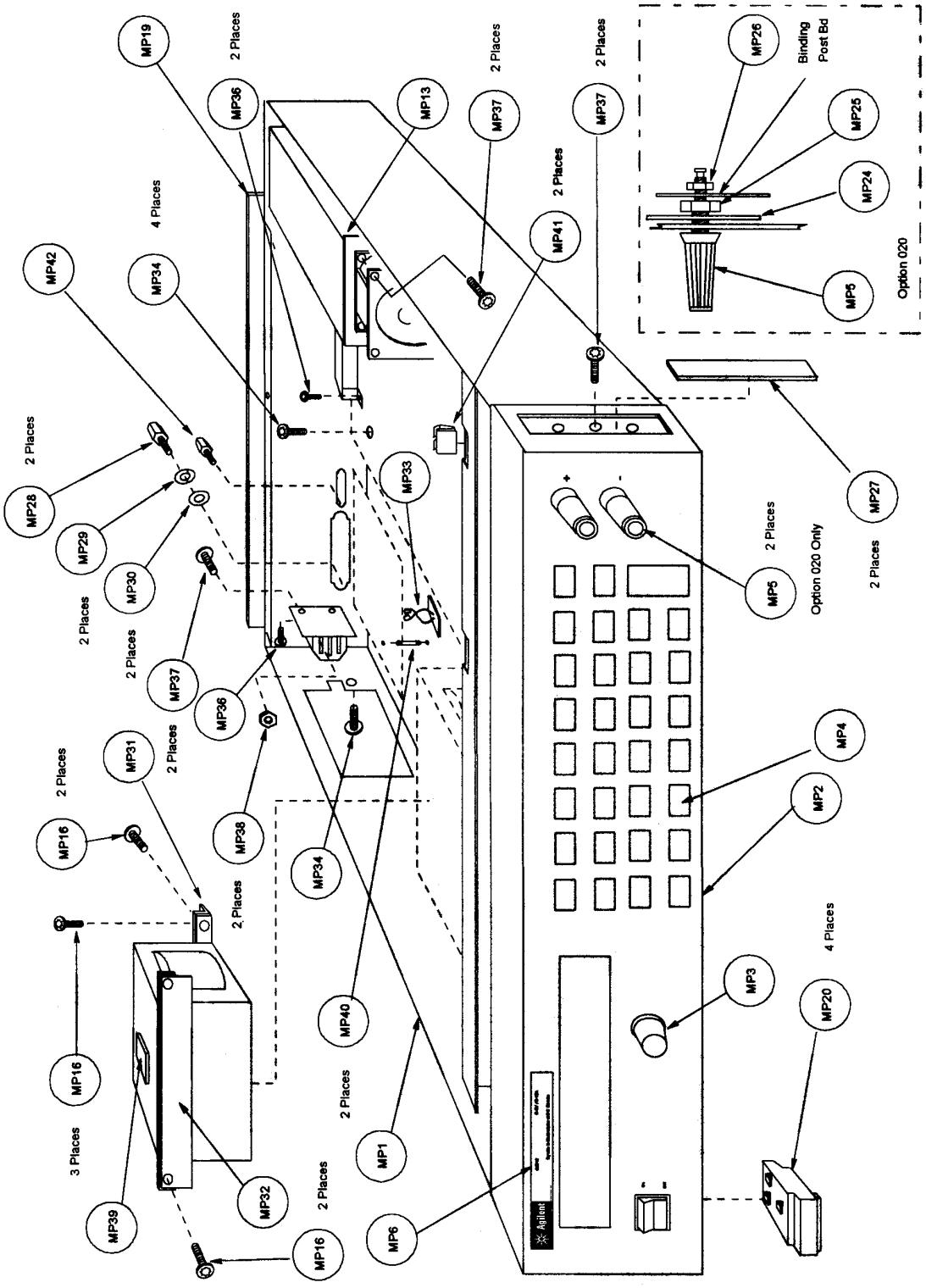

Figure 5-1. Mechanical Parts Identification

Table 5-4. A5 AC Input/RFI Board

Designator	Model	Part Number	Qty	Description
A5	All	5063-3433	1	AC Input/RFI PCA
C500	All	0160-4259	1	Cap 0.22 uF 10%
C501, 502	All	0160-8181	2	Cap 0.0022 uF
F500	All	2110-0055	1	Fuse 4AM, 250V (100Vac and 120Vac input)
F500	All	2110-0002	1	Fuse 2AM, 250V (220Vac and 230Vac input)
J508	All	1252-3771	1	AC Line Module
XF500	All	2110-0927	1	Fuseholder, with cap

Table 5-5. Binding Post Option #020

Designator	Model	Part Number	Qty	Description
A4	All	5063-3406	1	Binding Post PCA
C603, 604	All	0160-8153	2	Cap 4700 pF
J615	All	1252-0056	1	4 Pin Connector
MP5	All	1510-0091	2	Binding Post, Single, Red
MP26	All	0590-0305	2	Nut, Hex 6-32 w/Lockwasher
MP25	All	2950-0144	2	Nut, Hex 3/8-32 Nylon
MP24	All	06612-00004	1	Binding Post Plate
W15	All	06612-80010	1	Cable (A1 J314 to A4 J615)

6

Diagrams

Introduction

This chapter contains the A1 board component and test point layout drawing and the power supply block diagrams.

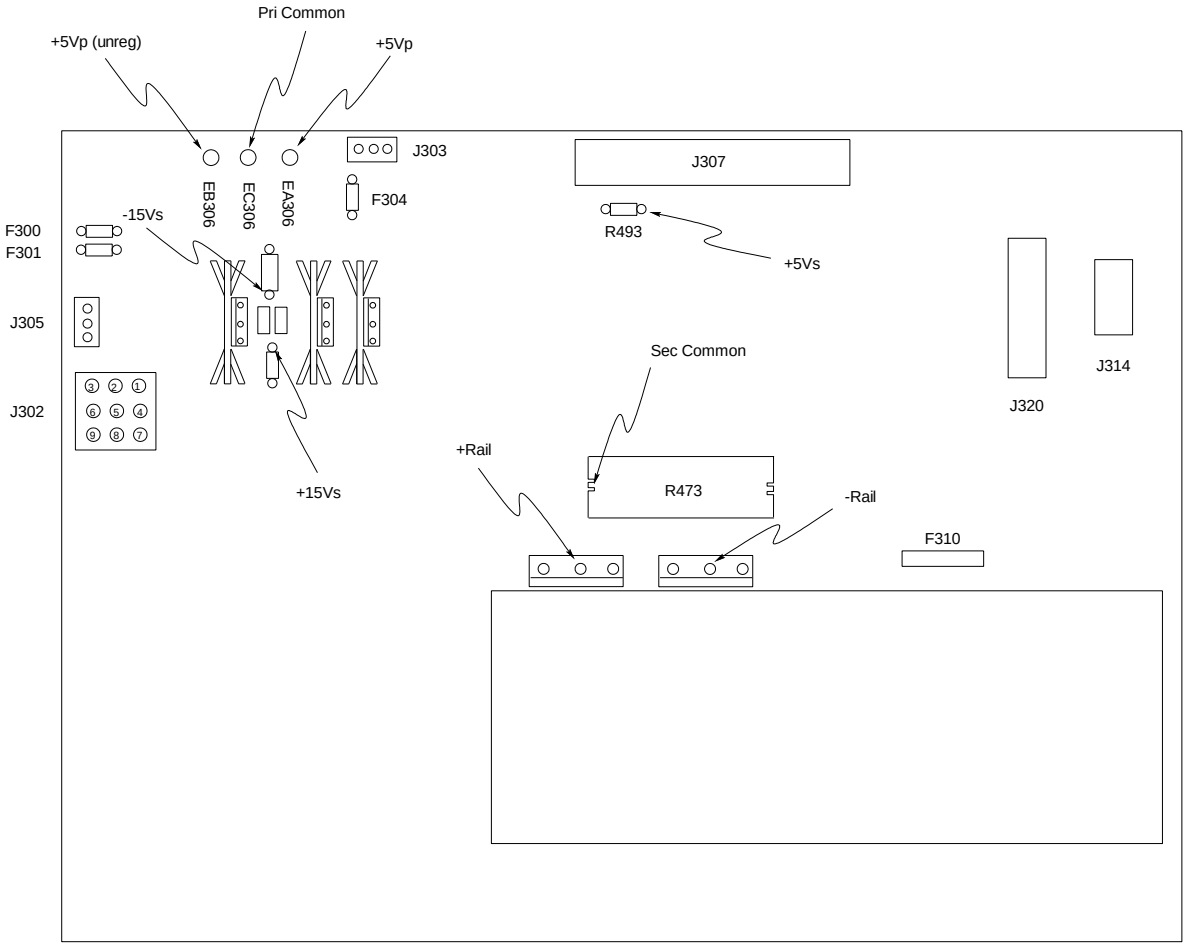

Figure 6-1. A1 Board Component and Test Point Locations

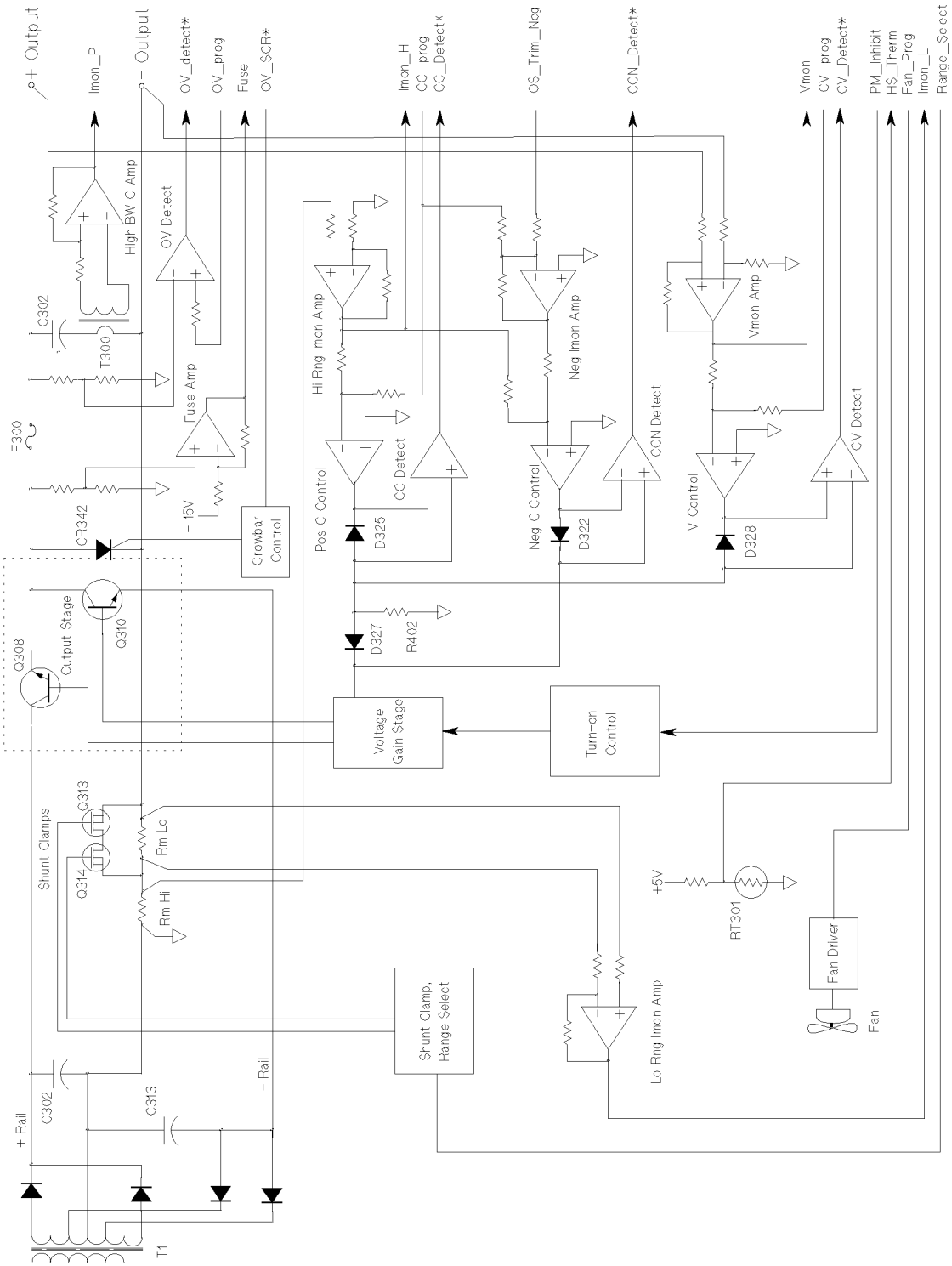

Figure 6-2. A1 Board Block Diagram

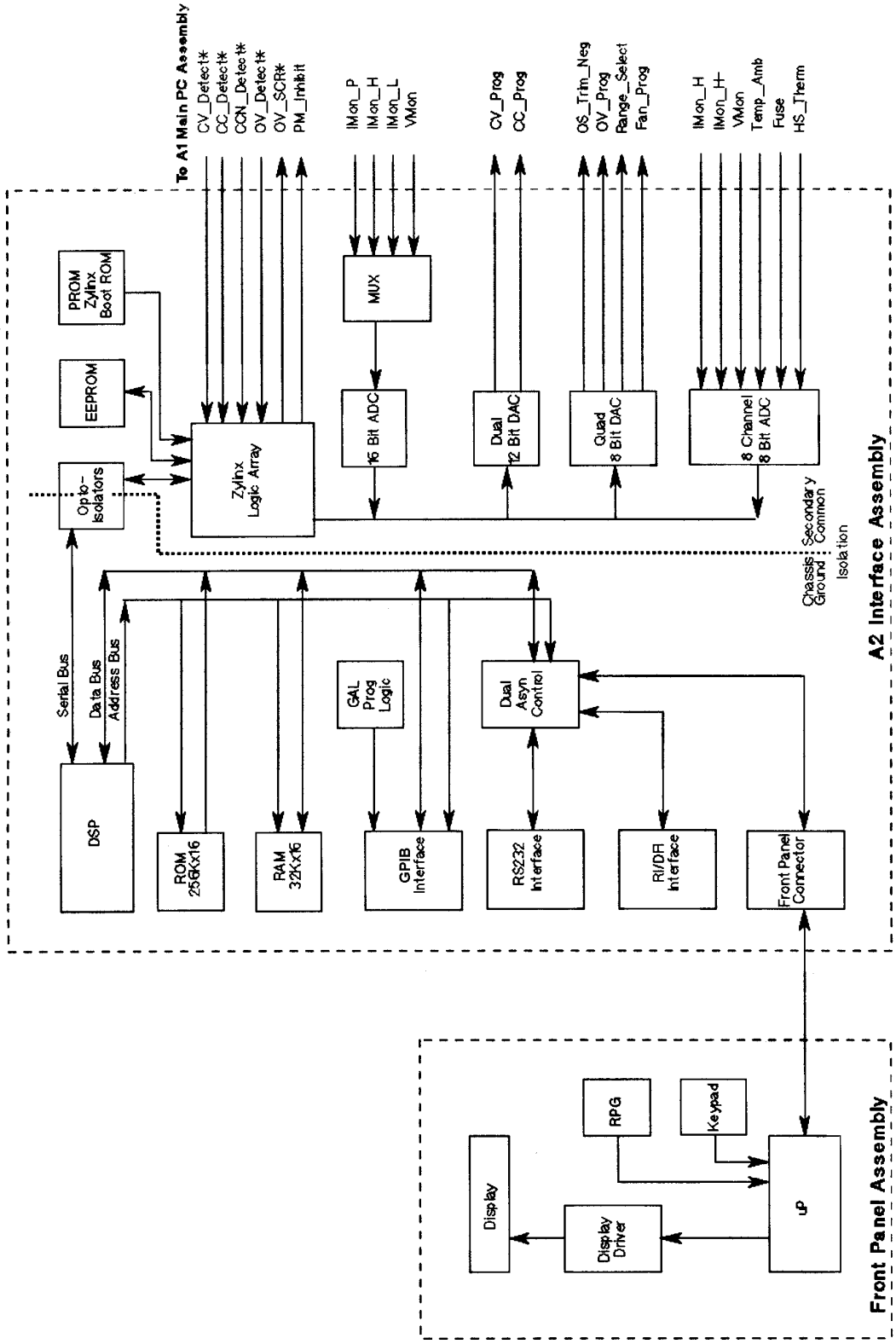

Figure 6-3. A2/A3 Boards Block Diagram

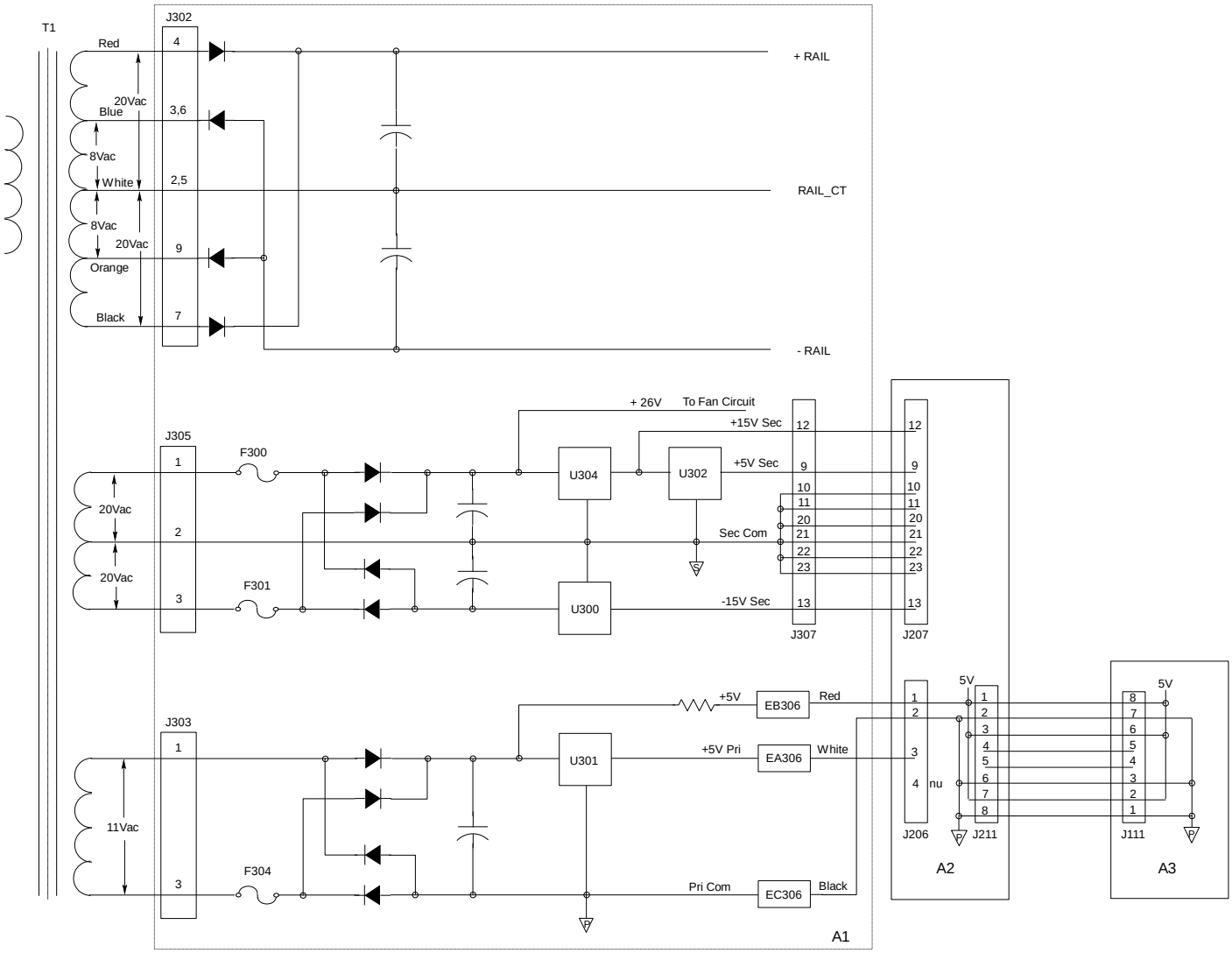

Figure 6-4. Rail and Bias Circuits

Index

—+—

+OUT, 39
+sense, 39

—A—

A1 board removal, 37
A2 board removal, 36
A2 Interface Board, 40
A2S201, 41
A3 board removal, 37
A3 Front Panel, 40
ADC, 40

—B—

bias voltages, 30, 31

—C—

cal denied, 33
calibration, 33
calibration - post repair, 33
CC, 30
CC line regulation, 18
CC load effect, 19
CC load regulation, 18
CC loop, 42
CC noise, 20
CC- operation, 17, 18
CC source effect, 19
CC_Detect*, 40, 42
CC_Prog, 41, 42
clear password, 33
constant current tests, 17
constant voltage tests, 14
Control, 42
copyrights, 5
cover removal, 36
current monitoring resistor, 13
current sink, 17, 18
CV, 30
CV load effect, 15
CV loop, 42
CV Noise, 15
CV source effect, 15
CV/CC control, 42
CV_Detect*, 40, 42
CV_Prog, 41, 42

—D—

DAC, 40
disable protection, 32
disassembly - tools, 35
disassembly procedure, 35
downprogramming, 43

—E—

EEPROM, 41
electronic load, 13
electrostatic discharge, 10
error codes, 29

—F—

F309, 41
fan speed, 32
Fan_Prog, 41, 43
firmware revisions, 10, 34
FLT, 39
front panel removal, 36, 37
Fuse, 41

—H—

hazardous voltages, 9
history, 5
GPIB, 39
HS_Therm, 41

—I—

identification, 5
IDN? query, 34
Imon_H, 41
IMon_H, 42
Imon_L, 41
Imon_P, 41
INH, 39
inhibit calibration, 33
initialization, 34
interface signals, 39

—J—

J307 voltages, 31

—L—

line voltage wiring, 38

—M—

manual revisions, 10

—N—

notice, 5

—O—

-OUT, 39
out of range, 33
OV_Detect*, 40, 43
OV_Prog, 41
OV_SCR*, 40, 42

—P—

PARD, 15, 20
password, 33
performance test form, 21
performance tests, 13
PM_Inhibit, 43
power-on self-test, 29
primary interface, 40
printing, 5
programming, 14
protection, 32

—R—

readback accuracy, 14
reference voltages, 30, 31
replaceable parts - chassis, 45
revisions, 10
RmHi, 42
RmLo, 42
ROM upgrade, 34
RPG, 40
RS-232, 39

—S—

safety considerations, 9
safety summary, 3
schematic notes, 49
SCR, 42, 43
secondary interface, 40
self-test, 29
-sense, 39
sense switch, 42
serial number, 5
shunt clamp, 42, 43
status annunciators, 30

—T—

Temp_Amb, 41
test equipment, 11
test setup, 12
trademarks, 5
transformer removal, 37
transient recovery, 16
troubleshooting - bias and reference supplies, 30, 31
troubleshooting - equipment, 24
troubleshooting - flowcharts, 24
troubleshooting - introduction, 23
troubleshooting - overall, 24
troubleshooting - status annunciators, 30

—U—

UNR, 30

—V—

verification tests, 13
VMon, 41, 42
voltage programming, 14

—W—

warranty, 2

This information is subject to change without notice.
© Keysight Technologies 1998, 2000, 2014
Edition 3, December 2014

5962-8202
www.keysight.com