Keysight Technologies

Dynamic Power Measurements for cdma2000® on the Keysight 8960 Wireless Test Set

Application Note

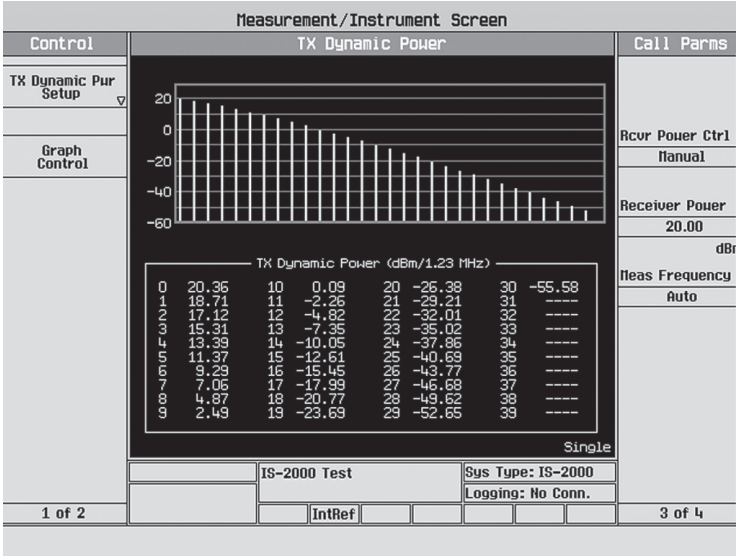

KEYSIGHT TECHNOLOGIES

Unlocking Measurement Insights

Introduction

A critical component of ensuring the CDMA device's operability is the calibration and verification of transmitter power. Today, typical designs utilize a switched amplifier, in for higher power use, and out for lower power situations. It is important that the output power be calibrated, both as a function of level and of frequency. Operation at maximum power requires special calibration, as well. Most mobile stations (MS) will operate in two frequency bands; the calibration must be performed in each band.

This paper focuses on how Keysight Technologies, Inc. 8960 wireless test set is used by CDMA MS developers and manufacturers to expedite the creation of transmitter power calibration tables and to reduce test time for this calibration in both the high and low power ranges.

Transmitter Operation

Figure 1 shows a typical RF path for a cdma2000 MS. I/Q modulation is used to generate the complex modulation typical of digital systems. This signal is up-converted to the desired output frequency. A modulator is used to set the output level. This modulator is typically a multiplying Digital to Analog Convertor (DAC), where the DAC value is used to scale the analog signal. The level out is nominally adjusted in linear steps in dB relative to the control DAC word. There are high and low power ranges which are controlled by the bypass switches around the final amplifier. There is a diode power detector which is used only to monitor the maximum power. Finally, there is a diplexor; a three-port device with a low pass filter for the MS transmit side, and a high pass filter for the MS receive side. The DAC values, which are derived from calibration tables, are set to control the output level.

Figure 1 shows the typical configuration for only one band. For a dual band MS, there will usually be a second up-converter with replication of all the following elements. The antenna will actually connect to an extra diplexor, one that separates the high frequency band from the low frequency band.

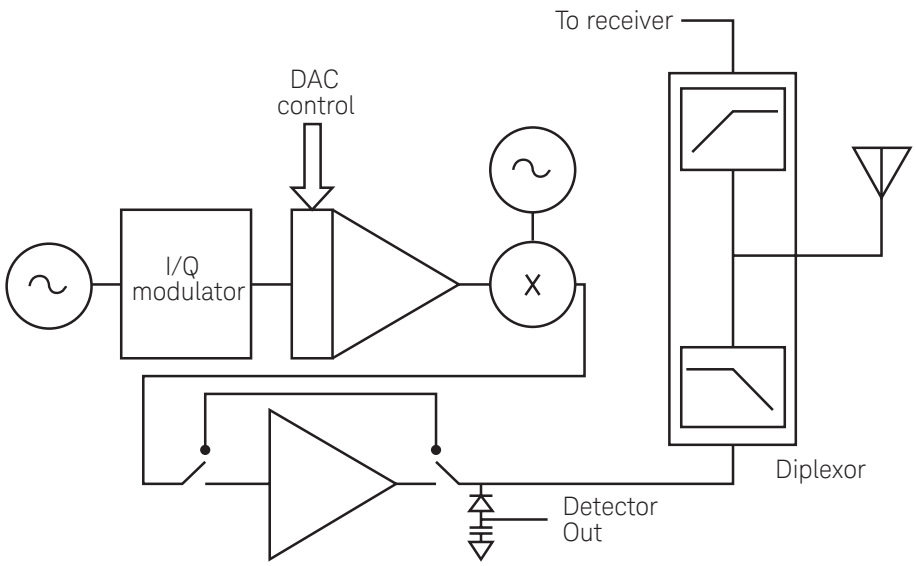

Figure 1. Typical cdma2000 transmitter block diagram.

Measurements of Power on CDMA Signals

CDMA waveforms generally resemble noise in a controlled bandwidth, which in the case of cdma2000 is 1.23 MHz. Since the MS is required to control its power over an 80 dB range, the measurement of high and low CDMA power signals often requires specialized equipment tailored to the task. For maximum power settings, an average power meter made from a diode detector can be used to measure the average power in a very wide bandwidth. At the lower power settings, a channel power meter must be used. Using a channel power meter, the MS signal needs filtering and detection to accommodate the noise-like signal. For CDMA power measurements, the channel power meter has the advantage of performing faster measurements. Keysight recommends using the channel power meter for measuring both the DAC versus level and the level versus frequency.

The validity of power transmission is based on calibration tables developed for each frequency band of each cdma2000 MS. Power calibration in these devices requires the creation of numerous tables, which are written into the MS:

High power range

- Detector voltage at maximum power (DET versus frequency)
- DAC versus level at one frequency – linearity
- Level versus frequency at constant DAC - flatness

Low power range

- DAC versus level at one frequency – linearity
- Level versus frequency at constant DAC – flatness

These calibration tables are illustrated pictorially in Figure 2.

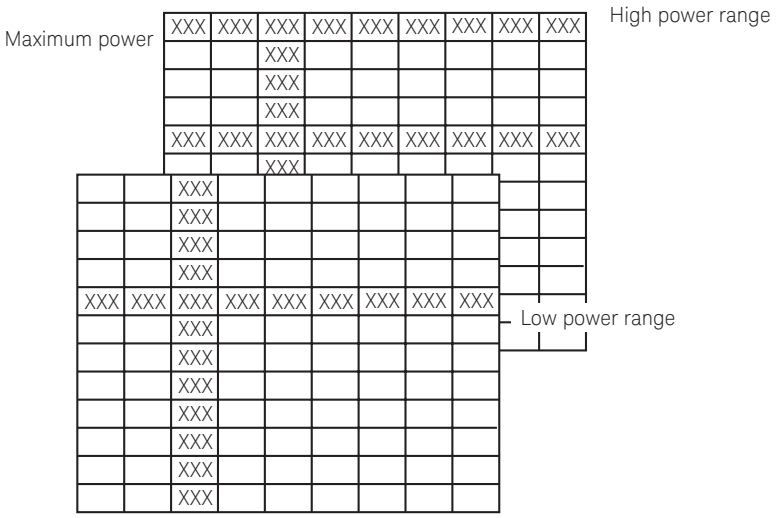

Figure 2: Calibration tables required for CDMA MSs.

Dynamic Power Measurement

The dynamic power measurement is one of linearity. The goal is to derive the calibration tables written into the MS for each power band and repeated for each frequency band of the MS. The measurement conditions for this test involve writing DAC values to the MS, and reading the resulting power. The required calibration data for the MS is the DAC setting for a particular power, for numerous power settings. Performing an iteration to find the proper DAC value can be done, but greatly increases the measurement time. Instead linear interpolation can be used to derive DAC from the nearest two measurements of (DAC, Level).

Linearity testing currently requires the most time, and is where Keysight has provided a new feature, dynamic power measurement, to greatly reduce test time. In the 8960 test set (E5515C), the power detection is performed using an analog to digital converter (ADC) that has sufficient bandwidth to fully capture the real MS waveform. This waveform is at an intermediate frequency, and gain is applied in a calibrated manner. The accuracy of this power detector has been cross calibrated against the average power meter and accuracy is typically within 0.5 dB. This is very small compared to the requirements of the MS which is within 9 dB.

The dynamic power test allows a succession of channel power measurements, each with a different expected power setting. The initial trigger is on a rise in RF power, and each successive trigger is based on the frame clock of the CDMA system. The triggers can be set for 20, 40, or 80 ms. The use of dynamic power measurements requires a compatible test mode in the MS. A typical calibration table requires 30 to 40 DAC values over about 50 dB range, which equates to a change in power of 1.25 to 1.67 dB per step. The start power for this test can be the maximum power limit at the test frequency. As part of the MS test mode, the MS will blank the RF for one frame, and then enable power on a frame boundary. On each successive frame, the DAC value will be adjusted to lower the power by the nominal amount. This is repeated until the full range is measured. This is shown in Figure 3.

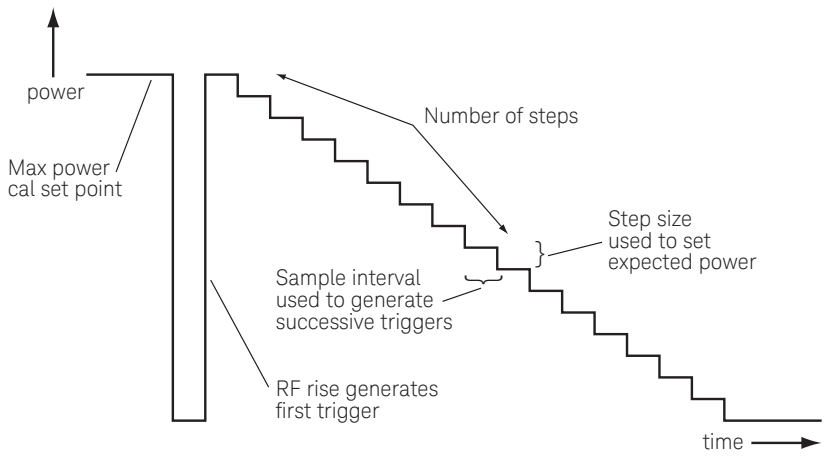

Figure 3. MS power versus time for dynamic power measurement.

GPIB Programming of Dynamic Power

The ease of use of the dynamic power measurement, particularly its automation, is an important feature. The sample Basic program below illustrates the commands needed for this test. Items in [square brackets] indicate calls that need to be made to the MS for its test mode control. In this example the initial DAC value is at the setting for 25 dBm, the maximum power of the MS, which is the initial value for the dynamic power measurement. It is further assumed that the nominal DAC step is 10 units, and each step is a nominal change in transmitter power of –1.25 dB. Forty measurements are to be made. There is no need to program the trigger on RF rise; this is part of the dynamic power measurement.

- MS is in test mode, on desired frequency, and set at Max Power DIM DpowArray(1:101)
  ! Always get 101 values back (Integrity + 40 non-NAN + 60 NAN values)
  OUTPUT 714;"SET:CTDP:TIM 5" ! Will set the dynamic power timeout value to 5.
- set 8960 to manual expected power, adjusted for +25 dBm
  OUTPUT 714;"RFAN:CONT:POW:AUTO 0;:RFAN:MAN:POW 25"
- Enable Dynamic Power measurement with 39 steps of -1.25 dB and 20 msec triggers
  OUTPUT 714;"SET:CTDP:STEP -1.25;:SET:CTDP:STEP:COUNT 39;:
  SET:CTDP:STEP:TIME MS20"
  [initiate Dynamic Power function in MS with 39 steps, DAC step is -10 per step]
- read array of 40 measurements from 8960
  OUTPUT 714; "READ:CTDP?"
  ENTER 714; DpowArray(*) ! DpowArray(1) = Integrity, DpowArray(2 thru 41) = dynamic power, and DpowArray(42 thru 101) = NAN

Note that no timing, triggers, or setup were needed for either the MS or the test set after the initial setup and start of measurement.

It should be noted that the dynamic power measurement is not available in a multi-measurement mode in the 8960. Initializing this measurement will suspend all other measurements. In addition, network activity and call processing should be avoided during the actual measurement interval to prevent the host from missing an internal trigger. This should be done in a test mode in the MS rather than in a real link to eliminate the need for any call processing.

Curve Fitting

In general, the level setting DAC and associated amplifier are very good, but the use of curve fitting should be verified for each MS design. Minor power adjustments over the dynamic range are typically all that will be required from calibration. One alternative to measurement at, or near, every calibration point is to measure only a few points along the range of operation, and derive a best fit curve that is used to compute all the intermediate DAC values. The graph shown in Figure 4 is actually two lines, one being the actual data measured with iteration at each point, and the other being a third order curve fit produced by using seven measured (DAC, level) points along the curve. The derived curve is a third-order power series. The derived curve will give the desired DAC value for a specific level, which matches the needs of the calibration tables. The curve will have the form Y = a0 + a1X + a2X^2 + a3X^3. In this case, X is the level in dBm, and Y is the DAC value. The actual curve shown here is

DAC = 539.022 + 6.9401 *pwr – 0.161 *pwr^2 – 0.0002 *pwr^3

This MS uses a nine-bit DAC, with range from 0 to 511. The power is in dBm, with all the levels being negative as this was for the low range. Figure 5 shows the error in DAC values between the curve fit and iterated calibration values. In this case, there are numerous examples of one DAC value error, but none larger. Over a sample of 20 phones, checking this technique against two power ranges and dual bands, the worst case error was three DAC values (one occurrence), and an error of two DAC values only occurring five times. This is against almost 3000 calibration points. The error per DAC value is estimated by 1/(slope), which is 1/6.6, or 0.15 dB per DAC value. This slope was computed from the two end points.

Notice that the measured values were in the form (DAC, Level), while the two variables were reversed in the equation. Using curve fitting has the added benefit of performing all interpolation at once.

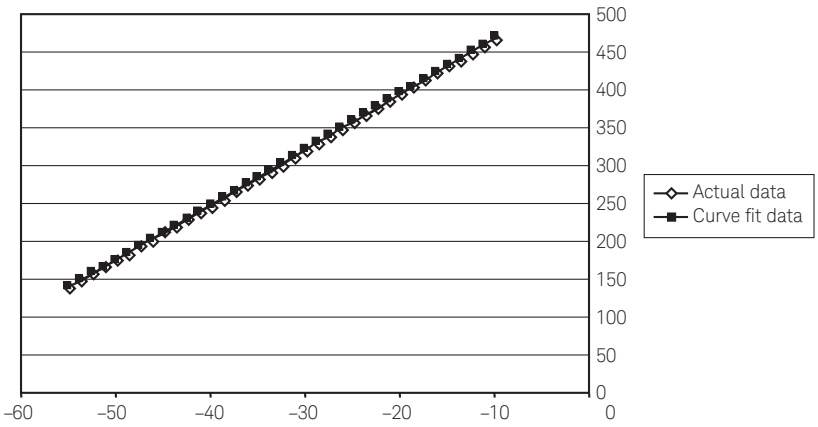

Figure 4. Curves of actual and curve-fit data, DAC versus level, dBm.

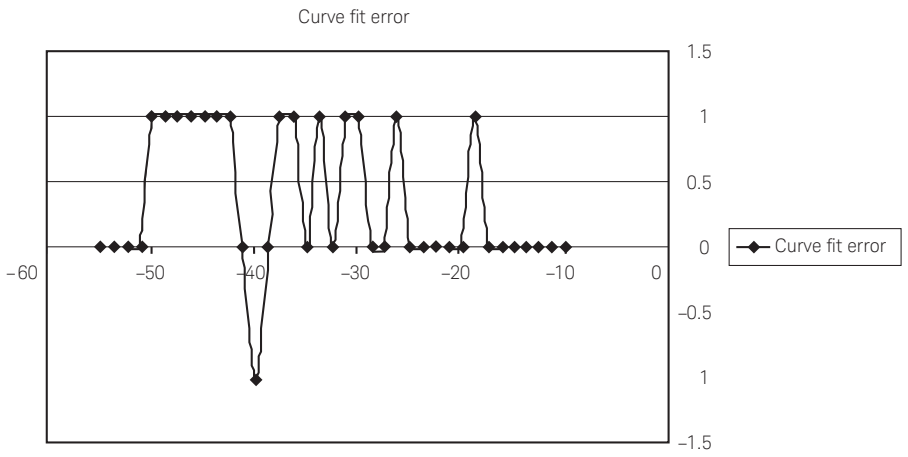

Figure 5. Error in DAC values as a function of level, dBm.

The dynamic power measurement in the 8960 is compatible with measurement of only a few points over the range of calibration. To do this, the step size will be enlarged, and the number of steps reduced.

Conclusion

The use of the dynamic power measurement function in the 8960 provides three key benefits.

1. It reduces remote programming code overhead – with the simple initiate-fetch array structure, there is little extra coding needed to support the function.
2. It enhances code development efficiency – coupled with lower code overhead is the efficiency of code development. There is no need to program each power step in the MS, the expected value in the 8960, and initiate each measurement.
3. It reduces test time – this is true particularly for the numerous data points typically collected for MS calibration.

The use of curve fitting may also be used to reduce the number of data points required for calibration.

myKeysight

myKeysight

www.keysight.com/find/mykeysight
A personalized view into the information most relevant to you.

Three-Year Warranty
www.keysight.com/find/ThreeYearWarranty
Keysight's commitment to superior product quality and lower total cost of ownership. The only test and measurement company with three-year warranty standard on all instruments, worldwide.

Keysight Assurance Plans
www.keysight.com/find/AssurancePlans
Up to five years of protection and no budgetary surprises to ensure your instruments are operating to specification so you can rely on accurate measurements.

www.keysight.com/go/quality
Keysight Technologies, Inc.
DEKRA Certified ISO 9001:2008
Quality Management System

Keysight Infoline
www.keysight.com/find/service
Keysight's insight to best in class information management. Free access to your Keysight equipment company reports and e-library.

Keysight Channel Partners
www.keysight.com/find/channelpartners
Get the best of both worlds: Keysight's measurement expertise and product breadth, combined with channel partner convenience.

cdma2000 is a US registered certification mark of the Telecommunications Industry Association.

For more information on Keysight Technologies' products, applications or services, please contact your local Keysight office. The complete list is available at:
www.keysight.com/find/contactus

Americas

Canada	(877) 894 4414
Brazil	55 11 3351 7010
Mexico	001 800 254 2440
United States	(800) 829 4444

Asia Pacific

Australia	1 800 629 485
China	800 810 0189
Hong Kong	800 938 693
India	1 800 11 2626
Japan	0120 (421) 345
Korea	080 769 0800
Malaysia	1 800 888 848
Singapore	1 800 375 8100
Taiwan	0800 047 866
Other AP Countries	(65) 6375 8100

Europe & Middle East

Austria	0800 001122
Belgium	0800 58580
Finland	0800 523252
France	0805 980333
Germany	0800 6270999
Ireland	1800 832700
Israel	1 809 343051
Italy	800 599100
Luxembourg	+32 800 58580
Netherlands	0800 0233200
Russia	8800 5009286
Spain	800 000154
Sweden	0200 882255
Switzerland	0800 805353
	Opt. 1 (DE)
	Opt. 2 (FR)
	Opt. 3 (IT)
United Kingdom	0800 0260637

For other unlisted countries:
www.keysight.com/find/contactus
(BP-04-23-15)

KEYSIGHT TECHNOLOGIES
Unlocking Measurement Insights

This information is subject to change without notice.
© Keysight Technologies, 2004 - 2015
Published in USA, July 15, 2015
5989-0522EN
www.keysight.com