System Developer Guide

Using LAN in Test Systems: The Basics

Application Note 1465-9

This set of application notes shows you how to simplify test system integration by utilizing open connectivity standards. The collective goal of these notes is to help you produce reliable results, meet your throughput requirements and stay within your budget.

Using LAN in Test Systems: The Basics, the first note in the series, provides an introduction to the essential elements of local-area networking (LAN), the basic attributes of test systems, and the benefits of using a LAN interface for control and data transfer in a system.

Please see page 7 for a list of the other titles in this series.

Table of contents

Coping with complexity **2**
Setting the standard **2**
Assessing wireless LAN alternatives **2**
Defining key attributes and elements **3**
Connecting Ethernet and Internet **3**
Comparing I/O alternatives **4**
Assessing GPIB **4**
Evaluating USB and LAN **4**
Using LAN in test systems **5**
Communicating with instruments **6**
Enabling additional capabilities **6**
Shaping the future of test systems **6**
Glossary **7**
Related literature **7**

Agilent Technologies

Coping with complexity

The basic purpose of any test system is to characterize and validate the performance of electronic components, assemblies or products. The complexity of this task depends on variables such as the physical nature of the device under test (DUT), the number of tests to be performed, the number of signals to be measured and the desired time per test.

The number of instruments used in the system can further complicate the task—and put a heavy burden on the digital input and output (I/O) between the system computer (usually a PC) and the test equipment (Figure 1). One of the best ways to cope with a high volume of I/O traffic—commands, status messages, test data—is LAN technology, a fast, open and low-cost alternative for system I/O.

Figure 1. PC and test instruments in a rack.

Setting the standard

Today's most pervasive computer networking standard goes by a few well-known names: IEEE 802.3, 10Base-T or Ethernet, and 100Base-T or Fast Ethernet. Some variant of this standard is almost always used when PCs share files, exchange e-mail, access the Internet and so on. With steady improvements in cost, speed and functionality, Ethernet has achieved virtually universal adoption for local-area networking (to the extent that LAN and Ethernet are sometimes used as synonyms).

Devices are often described as being 10Base-T, 100Base-T and 10/100Base-T. The number indicates the data rate in megabits per second: 10Base-T (Ethernet) is 10 Mbps and 100Base-T (Fast Ethernet) is 100 Mbps; 10/100Base-T devices are compatible with both standards. The T indicates unshielded twisted-pair (UTP) wiring to differentiate it from older standards that used coaxial cable.

Today, 100 Mbps technology is the most widely deployed standard and provides ample performance for most uses. Consistent with its history, the standard continues to evolve: Gigabit Ethernet was standardized in 1998 and 10 Gigabit Ethernet is in the works.

Tremendous competition among vendors of Ethernet-based LAN devices and cables has driven down prices and driven up the volume of products sold to enterprises and, more recently, small businesses and home users. The net result is a wide selection of high-quality, low-cost solutions for local-area networking.

Assessing wireless LAN alternatives

In many companies, an increase in workforce mobility has led to greater demand for flexible networking solutions, most notably wireless LAN (WLAN). As with wired LAN, there is an evolutionary series of standards that go by various names, but all are generally known as Wi-Fi (short for "wireless fidelity"). The three main standards are described below in order of commercial introduction:

- **IEEE 802.11b** — Uses radio transmissions at 2.4 GHz to send data at up to 11 Mbps and with an indoor range of 100-150 feet.
- **IEEE 802.11g** — Uses 2.4 GHz transmissions to send data at up to 54 Mbps and with an indoor range of 100-150 feet. It interoperates with 802.11b. (Some vendors also offer proprietary extensions that can provide higher performance.)
- **IEEE 802.11a** — Uses 5.0 GHz transmissions to send data at up to 54 Mbps and with an indoor range of 25-75 feet. 802.11a is not compatible with 802.11b and g because it uses a different modulation method.

For test systems, WLAN can enable measurements in remote or hazardous settings and provide an alternative to costly cable runs. However, none of the current standards can match the combination of speed, reach and noise immunity possible with a 100Base-T wired LAN. What's more, WLAN signals are susceptible to interference from other devices that operate in the same frequency range, including cordless phones and microwave ovens. Wi-Fi signals may also interfere with the testing of wireless DUTs.

Defining key attributes and elements

Wired LAN connections are made with UTP cables called "category 5" or CAT5, which is the name of a wiring standard defined by the Electronics Industries Association and Telecommunications Industry Association (EIA/TIA). A CAT5 LAN cable contains four pairs of copper wire and uses locking RJ-45 connectors at both ends (Figure 2). It is largely immune to interference and crosstalk and can support data rates of up to 100 Mbps.

The other essential elements of a LAN are the hardware devices that control, manage, direct and amplify the data being sent between other devices on the network.

- **Adapter** – This refers to the LAN card and connector in a PC (and some new-generation test equipment) that provides an electrical interface to the network.
- **Hub** – A small, standalone unit that connects multiple devices together, usually in what's called a "star" topology (Figure 3). In this configuration, any device can discover and talk to any other device on the LAN. Hubs use a broadcast model to transmit data, a method that reduces the effective bandwidth (or data rate) when network traffic is heavy.
- **Switch** – Another small, standalone unit that connects multiple devices to a single LAN line. Because switches contain more intelligence than hubs–and are able to send data to a specific destination–they typically provide better performance by maintaining the full bandwidth (data rate) of the network.
- **Bridge** – Similar to a switch but with just one input and one output. Used to break networks into segments, which can improve the performance within each segment.
- **Repeater** – Similar to a bridge–one input, one output–but contains active circuitry that reads and regenerates the incoming signal. Used to extend the length of a network segment.
- **Router** – A standalone box that joins multiple networks (wired or wireless) through its ability to handle high-level protocols such as TCP/IP (see "Connecting Ethernet and Internet"). Routers allow one- and two-way communication between devices and enable "awareness" among the devices on a network. They also allow devices to hide their presence, enabling the creation of small, private networks.

Connecting Ethernet and Internet

TCP/IP stands for "transfer control protocol" and "Internet protocol," two separate standards that work together to provide the foundation of data communication on the Internet. For example, Web browsers use TCP/IP to communicate with Web servers. TCP/IP also enables seamless connections between local Ethernet networks (also called intranets) and the Internet, and between different types of computers (e.g., Windows, UNIX and Linux).

Technically speaking, Ethernet is just one type of network technology that can carry TCP and IP traffic. Other examples include Token Ring (IEEE 802.5), DOCSIS (cable modem), xDSL and ISDN.

The maximum cable length for any segment of a LAN is 100 meters (about 328 feet). Hubs can extend that distance to roughly 1,600 meters (about one mile) and the use of routers, switches, bridges or repeaters between LAN segments can yield a network of virtually unlimited reach.

Figure 2. A CAT5 LAN cable with RJ-45 connector.

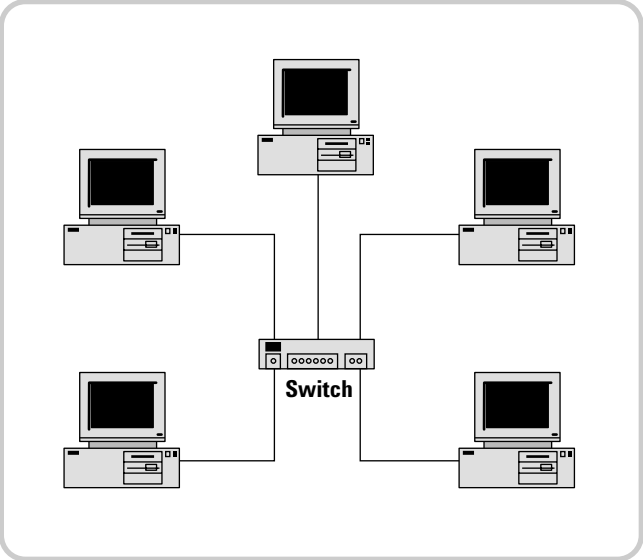

Figure 3. A simple network with one switch and multiple PCs in a star topology.

Comparing I/O alternatives

As described earlier, complex systems include a collection of instruments under the control of a PC that has been programmed to perform testing and reporting routines. The computer plays three important roles, two of which rely on the I/O connection to the test equipment:

- It provides fast, reliable control by sending commands, configuring instruments, reading status messages and initiating measurements.
- It gathers test data—raw or pre-processed—from the instruments and, if necessary, stores it for post-processing and archival purposes.
- After testing one or more products, the computer (and its test software) may also analyze the results and provide reports for further evaluation by engineering staff, manufacturing management, contract manufacturers and others.

As each task becomes more data-intensive, the choice of I/O interface becomes more significant (Figure 4). Speed is an important factor, but a test-system connection must also be rugged, noise-tolerant and able to handle 10 or more instruments.

Assessing GPIB

Traditionally, the IEEE 488 parallel standard has been the interface of choice for test equipment. Known as both GPIB (general purpose interface bus) and HP-IB (when Agilent was part of Hewlett-Packard), this type of I/O port is built into essentially all test equipment intended for automated applications. In the past, special-purpose computers designed for instrument control also included GPIB ports. As PCs became less expensive and more powerful, fully supported GPIB cards became available and PCs quickly grew to dominate instrument-control applications.

Today, GPIB is generally found only in test equipment, limiting the potential volume (and therefore the minimum cost) of adapters and the associated parallel cables. In the PC world, however, widespread use of LAN and the Universal Serial Bus (USB) has driven down their respective costs to levels much lower than that of GPIB.

Evaluating USB and LAN

Lower cost is good, but speed and ruggedness are crucial for test applications. USB v1.1 falls short on speed, providing 12 Mbps. USB v2.0 can achieve up to 480 Mbps with compatible devices and is also backwards compatible with older USB v1.1 devices (but only at the 12 Mbps rate). Physically, USB connectors are very sturdy but are susceptible to vibration and inadvertent removal because they lack the locking mechanisms built into GPIB and LAN connectors.[1]

A 100 Mbps LAN connection is slower than USB v2.0 but is much faster than GPIB (typically 500 KBps). What's more, the pervasiveness of LAN in most business settings lets it do double duty as a conduit for data sharing and a mechanism for remote or shared operation of a system. A LAN adapter's locking RJ-45 connector also provides a more secure system connection than USB. Connecting multiple instruments to the system requires only the addition of hubs or switches with sufficient ports (individually or cascaded together), and there is no limit to the number of instruments that can be included in a LAN-based system.

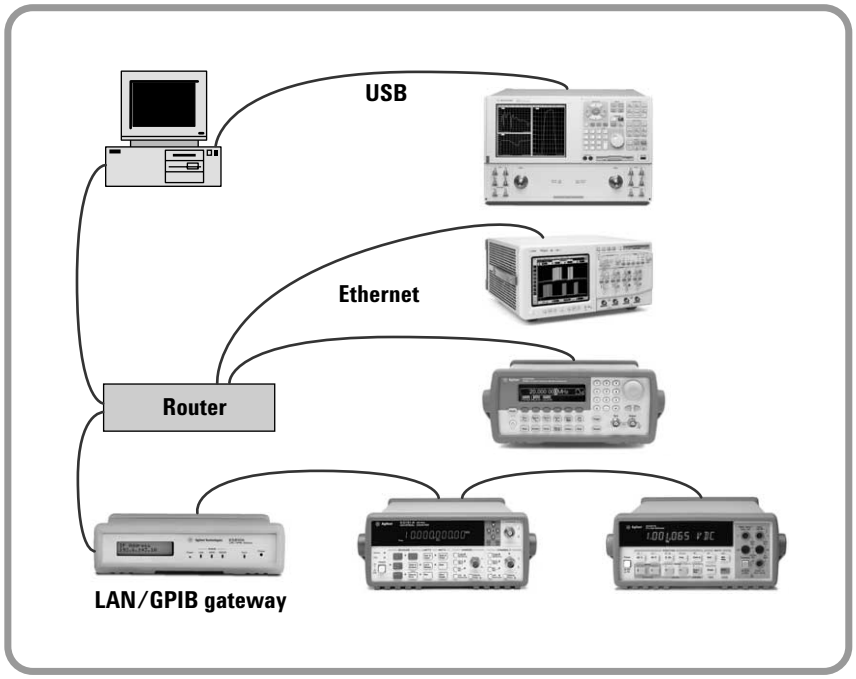

Figure 4 An example test system that utilizes a PC, several instruments, a LAN router, a LAN/GPIB gateway and three types of I/O.

1 *For more information about using USB with test systems, please see pages 3-4 of Agilent Application Note 1465-2, Computer I/O Considerations.*

Using LAN in test systems

The advantages of LAN technology make it a good choice for meeting the I/O needs of test systems. With LAN adapters built into most current-generation PCs, the computing portion of the system requires minimal physical configuration to support test system deployment.

This situation is driving the addition of LAN connectors and adapters to current- and next-generation test equipment. One recent example is the Agilent 33220A function generator (Figure 5), which has LAN, USB and GPIB interfaces built into its rear panel. The inclusion of both LAN and GPIB may be quite common for the next few years. Agilent recognizes the pervasiveness of GPIB in existing test systems and will continue to support it. At the same time, we are also committed to increasing the number of instruments that include LAN-based I/O because it is expected to be the most prevalent interface in the future.

As a near-term solution, standalone gateway devices make it possible to connect current-generation PCs to older test equipment and systems. The Agilent E5810A LAN/GPIB gateway (Figure 6) has a LAN port for the PC and a GPIB port that can control up to 14 instruments. By providing LAN-based access to a test system, the gateway enables useful capabilities such as remote monitoring of test progress and collaboration and consultation with distant colleagues. It also has a built-in web server, which lets you use a web browser to set up, configure and use the gateway—and control instruments—from a remote computer.

The E5810A gateway is fully supported by the Agilent E2094M IO Library, which enables automatic control of instrumentation from a variety of programming languages. The gateway also has Universal Plug&Play (UPnP) support, making it appear as a network device in Windows® XP.

Figure 5 The rear panel of the 33220A function generator includes USB, LAN and GPIB interfaces.

Figure 6 The E5810A LAN/GPIB gateway enables communication between LAN-enabled PCs and GPIB-based instruments.

Communicating with instruments

LAN support in a test instrument usually means three things. First is a 10/100Base-T adapter, which is compatible with today's most commonly deployed LAN equipment. Next is the locking RJ-45 connector that ensures a dependable connection to the instrument as well as the hub, switch or PC at the other end. The third element is the test and measurement communication protocol called VXI-11.

VXI refers to both a test-and-measurement standards body and its well-known multi-vendor standard for modular, cardcage-based test systems. VXI-11 is a separate—and more recent—standard that defines LAN-based connectivity for all types of test equipment, not just VXI.

The VXI-11 protocol makes the I/O connection appear to PC applications as though the instruments were connected via GPIB. In practice, this means applications written for GPIB are likely to work on VXI-11 instruments, especially if they use the VISA I/O API—the Virtual Instrument Software Architecture's input/output application programming interface. (VISA is also a multi-vendor standard.)[2]

Enabling additional capabilities

Through the many available applications of Ethernet and TCP/IP, LAN-enabled instruments can do more than just support VXI-11. For example, they can be equipped with built-in Web servers.

A good example of this capability is the Agilent Infiniium family, which includes digital sampling oscilloscopes, mixed-signal oscilloscopes and digital communication analyzers. By pointing a Web browser at the instrument's IP address, the user can view the instrument configuration, change its settings, start a measurement and see the results (Figure 7).

Some LAN-equipped instruments provide even greater functionality: inside every Infiniium product is a PC running custom software on a version of the Microsoft, Windows operating system. Windows has several LAN services built in, enabling capabilities such as sharing of files, folders, drives and printers.

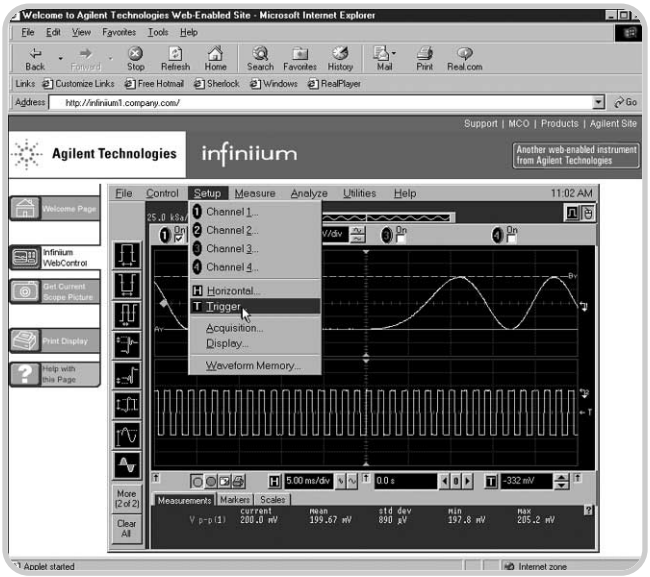

Figure 7. The virtual front panel of the Infiniium oscilloscope enables browser-based interaction with the instrument.

Shaping the future of test systems

Fast and inexpensive LAN technology has achieved widespread adoption in the computer world and is now shaping the future of test system development and operation. LAN-based systems provide several advantages for test-and-measurement applications: lower-cost hardware and cabling; pervasive availability throughout most enterprises; remote or shared system control; fast data transfers; file, drive and printer sharing; and browser-based interaction with individual instruments.

For decades, the robust GPIB interface has been the dominant I/O conduit for test systems. Agilent is committed to supporting GPIB well into the future—and we are also committed to developing new-generation test equipment that includes both GPIB and LAN interfaces.

To learn more about I/O connections and other ways to simplify system integration and apply the advantages of open connectivity, please visit our web site at **www.agilent.com/find/systemcomponents.**

2 *To learn more, visit* ***www.vxibus.org/specs.html*** *(VXI-11) and* ***www.vxipnp.org*** *(VISA).*

Glossary

Adapter – the LAN card and connector that provides an electrical interface to the network.

API – application programming interface.

Bridge – a LAN device that connects segments of a network.

DUT – device under test; the component, subassembly or product to be measured by the test system.

Ethernet – a specific technology that has become pervasive in local-area networking.

Gateway – a hardware device that connects different standards and protocols (e.g., LAN to GPIB).

GPIB – general purpose interface bus; the dominant parallel I/O connection for test equipment and test systems.

HP-IB – Hewlett-Packard Interface Bus; another name for GPIB.

Hub – a multi-port LAN device that connects multiple devices together, usually in a star topology.

IVI – Interchangeable Virtual Instruments; a standard instrument driver model that enables swapping of instruments without changing the system software.

LAN – local-area network.

Repeater – a LAN device that extends the length of a network segment by reading, regenerating and repeating all incoming signals.

Router – a LAN device that joins multiple networks and enables creation of small, private networks.

Switch – a LAN device that connects multiple devices to a single LAN line; however, unlike a hub, it preserves full network bandwidth to each device.

TCP/IP – transfer control protocol and Internet protocol; the two standards that provide the data communication foundation of the Internet.

USB – Universal Serial Bus; designed to replace the RS-232 and RS-422 serial buses used in PCs.

UPnP – Universal Plug & Play; a networking architecture that ensures compatibility of devices, software and peripherals.

Virtual front panel – a replica of an instrument's keyboard and display, often presented as a Web page.

VISA – Virtual Instrument Software Architecture; a common foundation for system software components, including instrument drivers, virtual front panels and application software.

VXI – VME extensions for instrumentation; a standard, open architecture for modular test instrumentation and systems.

Wi-Fi – wireless fidelity; the marketing name for the various IEEE 802.11 wireless LAN standards.

WLAN – wireless LAN; a flexible way to give mobile workers access to the network.

Related literature

The other notes in this series provide additional information about the successful use of LAN in test systems:

- *Using LAN in Test Systems: Network Configuration,* AN 1465-10 (available in September 2004)
- *Using LAN in Test Systems: PC Configuration,* AN 1465-11 (available in October 2004)
- *Using USB in the Test and Measurement Environment,* AN 1465-12 (available in October 2004)
- *Using SCPI and Direct IO vs. Drivers,* AN 1465-13 (Available in November 2004)
- Using LAN in Test Systems: Applications, AN 1465-14 (Available in January 2005)

Other Agilent application notes provide additional hints that can help you develop effective test systems:

- *Creating a Wireless LAN Connection to a Measurement System* (AN 1409-3) pub no. 5988-7688EN **http://cp.literature.agilent.com/litweb/pdf/5988-7688EN**
- *Introduction to Test-System Design* (AN 1465-1) pub. no. 5988-9747EN **http://cp.literature.agilent.com/litweb/pdf/5988-9747EN.pdf**
- *Computer I/O Considerations* (AN 1465-2) pub. no. 5988-9818EN, **http://cp.literature.agilent.com/litweb/pdf/5988-9818EN.pdf**
- *Understanding Drivers and Direct I/O* (AN 1465-3) pub. no. 5989-0110EN **http://cp.literature.agilent.com/litweb/pdf/5989-0110EN.pdf**
- *Choosing Your Test-System Hardware Architecture and Instrumentation* (AN 1465-5) pub. no. 5988-9820EN **http://cp.literature.agilent.com/litweb/pdf/5988-9820EN.pdf**
- *Understanding the Effects of Racking and System Interconnections* (AN 1465-6) pub. no. 5988-9821EN **http://cp.literature.agilent.com/litweb/pdf/5988-9821EN.pdf**
- *Maximizing System Throughput and Optimizing Deployment* (AN 1465-7) pub. no. 5988-9822EN
- *Operational Maintenance* (AN 1465-8) pub. no. 5988-9823EN **http://cp.literature.agilent.com/litweb/pdf/5988-9823EN.pdf**

Agilent Technologies' Test and Measurement Support, Services, and Assistance
Agilent Technologies aims to maximize the value you receive, while minimizing your risk and problems. We strive to ensure that you get the test and measurement capabilities you paid for and obtain the support you need. Our extensive support resources and services can help you choose the right Agilent products for your applications and apply them successfully. Every instrument and system we sell has a global warranty. Support is available for at least five years beyond the production life of the product. Two concepts underlie Agilent's overall support policy: "Our Promise" and "Your Advantage."

Our Promise
Our Promise means your Agilent test and measurement equipment will meet its advertised performance and functionality. When you are choosing new equipment, we will help you with product information, including realistic performance specifications and practical recommendations from experienced test engineers. When you receive your new Agilent equipment, we can help verify that it works properly and help with initial product operation.

Your Advantage
Your Advantage means that Agilent offers a wide range of additional expert test and measurement services, which you can purchase according to your unique technical and business needs. Solve problems efficiently and gain a competitive edge by contracting with us for calibration, extra-cost upgrades, out-of-warranty repairs, and onsite education and training, as well as design, system integration, project management, and other professional engineering services. Experienced Agilent engineers and technicians worldwide can help you maximize your productivity, optimize the return on investment of your Agilent instruments and systems, and obtain dependable measurement accuracy for the life of those products.

Agilent Email Updates

www.agilent.com/find/emailupdates
Get the latest information on the products and applications you select.

Agilent T&M Software and Connectivity
Agilent's Test and Measurement software and connectivity products, solutions and developer network allows you to take time out of connecting your instruments to your computer with tools based on PC standards, so you can focus on your tasks, not on your connections. Visit
www.agilent.com/find/connectivity
for more information.

For more information on Agilent Technologies' products, applications or services, please contact your local Agilent office. The complete list is available at:

www.agilent.com/find/contactus

Phone or Fax

United States:
(tel) 800 829 4444
(fax) 800 829 4433

Canada:
(tel) 877 894 4414
(fax) 905 282 6495

China:
(tel) 800 810 0189
(fax) 800 820 2816

Europe:
(tel) 31 20 547 2111

Japan:
(tel) (81) 426 56 7832
(fax) (81) 426 56 7840

Korea:
(tel) (080) 769 0800
(fax) (080)769 0900

Latin America:
(tel) (305) 269 7500

Taiwan:
(tel) 0800 047 866
(fax) 0800 286 331

Other Asia Pacific Countries:
(tel) (65) 6375 8100
(fax) (65) 6755 0042
Email: tm_ap@agilent.com

Product specifications and descriptions in this document subject to change without notice.

Microsoft and Windows are U.S. registered trademarks of Microsoft Corporation.

© Agilent Technologies, Inc. 2004
Printed in USA, July 29, 2004
5989-1412EN

Agilent Technologies