Keysight Technologies

X-Series Signal Analyzers Preselector Tuning for Amplitude Accuracy in Microwave Spectrum Analysis

Application Note

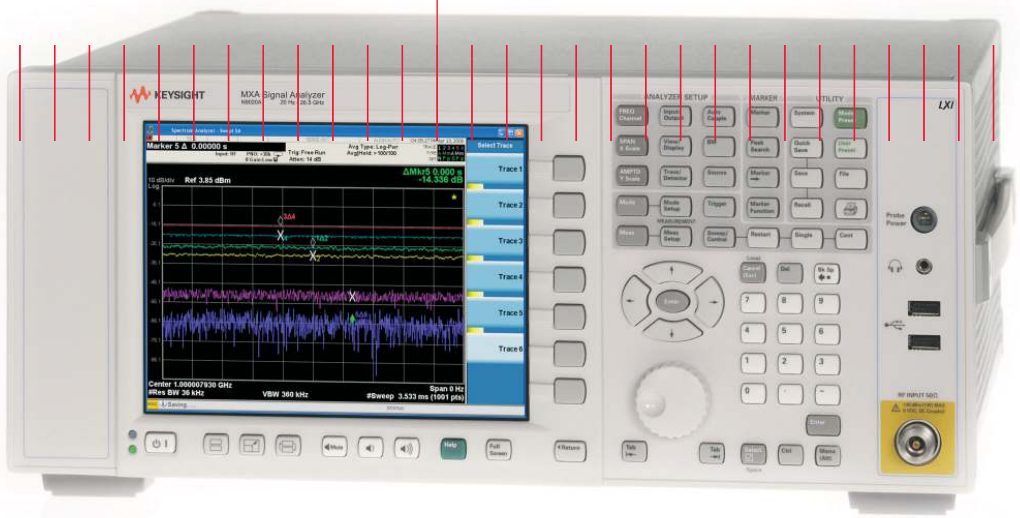

KEYSIGHT TECHNOLOGIES

Introduction

While modern spectrum analyzers have been evolving to provide ever-better accuracy at RF frequencies, their accuracy at microwave frequencies has not generally been improving. Indeed the requirements placed on the analyzer user to achieve the best accuracy have become harder to realize with modern signals such as wideband digital modulation. Hardware and algorithms in the X-Series signal analyzers help you maintain the best accuracy without requiring a specific kind of input signal or external test signal.

Microwave spectrum analyzers use preselectors to improve performance by removing unwanted mixer images and responses to local oscillator (LO) harmonics. Unfortunately these preselectors have instabilities and must be retuned frequently, and the preselector tuning previously required a signal of near-CW statistics at the frequency of interest. In the X-Series signal analyzers, noise-source tuning removes this difficult-to-satisfy requirement.

Table of Contents

Introduction 2

Low band, high band, and preselection 2

Problems with YIG Preselectors 3

Operation of and requirements for preselector centering 5

A new centering capability 6

Using the X-Series preselector centering capability 7

Summary 7

Low Band, High Band, and Preselection

Modern spectrum analyzers operating up to 26.5 GHz have a "low band" and a "high band" signal path, as shown in the simplified block diagram, Figure 1.

The "low band" in the X-Series signal analyzers covers frequencies up to 3.6 GHz. In low band, the signal is upconverted to a high IF (5.1225 GHz), then downconverted to an IF of 322.5 MHz. This double conversion scheme dramatically reduces mixer image responses.

"High band" frequency ranges cannot practically be built with the same block diagram as low band because the first IF amplifier would have to work at a frequency where the amplifier noise and distortion would inevitably be higher than users want.

The alternative block diagram is a single conversion to the IF frequency as shown in Figure 1. In this block diagram, image responses in the first mixer are spaced by only twice the IF frequency, or about 600 MHz. Such images are unacceptable in a general purpose spectrum analyzer. Thus the tunable preselector (band-pass filter) is used to filter out the images.

This filter is built using YIG (yttrium-iron-garnet) technology. Spheres of YIG material act to filter the signal with a passband frequency that is controlled by a magnetic field.

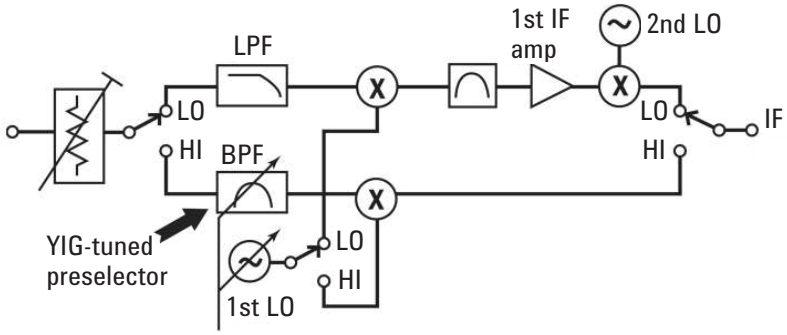

Figure 1: Block diagram of low-band/high-band spectrum analyzer front end

Problems with YIG Preselectors

YIG preselectors usually have a passband width of about 40 to 80 MHz. When used at frequencies up to 26.5 GHz, the required Qs of the resonators are very high. This high Q is accompanied by amplitude and frequency instabilities.

Post-tuning drift is one form of instability. The magnet used to tune the resonant frequency of the YIG spheres heats up or cools down as the selected

change of the magnet affects the dimensions of the magnet and thus the magnetic field strength, and thus the frequency of the filter tuning.

Mechanical aging of the magnet/sphere structure works in the same way to cause further instabilities.

Also, the relationship between the tuning current and the filter center frequency is not perfectly modeled by any simple algebraic function. Therefore even without tuning instabilities, there are tuning errors. The result is that frequency tuning errors lead to amplitude errors, as demonstrated in Figure 2.

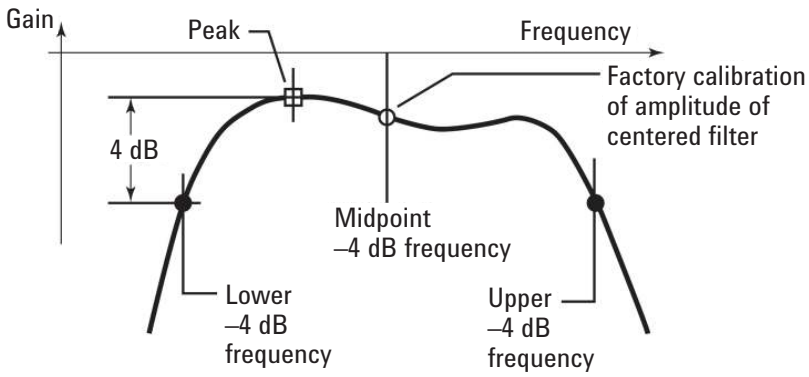

Figure 2A: Typical passband response of a YIG-tuned preselector

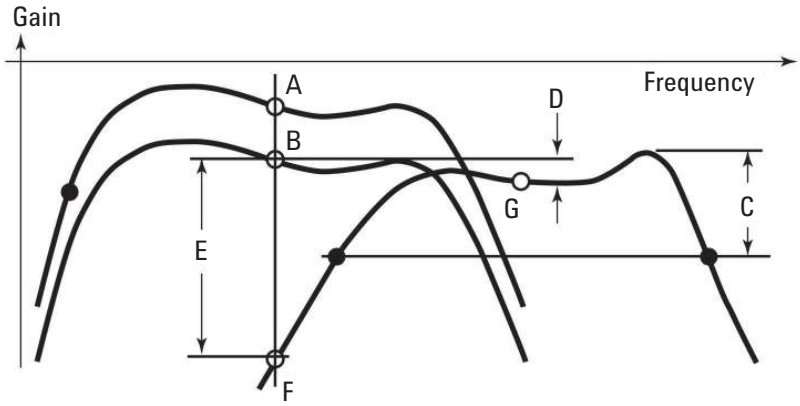

Figure 2B: YIG preselector passband response changes

Problems with YIG Preselectors (continued)

Figure 2A shows a typical YIG filter response. The x-axis is frequency, but because frequency is nearly proportional to tuning current, the x-axis can also be thought of as being tuning current. In this example, small tuning current errors map to amplitude errors proportional to the slope of the passband shape at the operating point. The design operating point is the midpoint between the –4 dB response points, because this design is highly robust regarding tuning errors.

The YIG filter can be adjusted by the user of a modern spectrum analyzer. The user may adjust the operating current directly, or he may execute a "preselector center" operation. A "centering" operation, whether done manually or with the automated preselector center key, acts to optimize the robustness of tuning by centering the preselector passband. The robustness of centering and the convenience of having a centering key make centering preferred over peaking. Factory calibration of amplitude response is performed using centering; therefore, peaking would give poorer amplitude accuracy.

The X-Series signal analyzers make this centering operation (and the amplitude accuracy it offers) more practical and accessible through new hardware and algorithms described in the section "A New Centering Capability" on page 6.

Figure 2B demonstrates how important centering can be. In this figure, point A shows the response used for factory calibration of frequency response. This point is on the response curve of a new analyzer at room temperature. Its horizontal location is at the midpoint between the –4 dB (relative to peak) response frequencies.

Point B is on a congruent curve, displaced vertically to indicate the expected total system response changes when the ambient temperature is changed. The influences of post-tuning drift and aging, in addition to ambient temperature changes, could result in the curve with point F on it. In this case, the amplitude error can be quite large. This error is indicated as length E, which is the difference between the response points B and F.

To improve amplitude accuracy, the analyzer should be recentered. Dimension C shows the location of the –4 dB points relative to the peak of the new tuning curve. Recentering results in response as shown with point G. The new error is now distance D, which is much smaller than the distance E.

Operation of and Requirements for Preselector Centering

The "preselector centering" algorithm measures the filter response in order to optimize the tuning. It assumes a CW-like input signal, and observes the relative response as the tuning current is swept. It searches this relative response curve for the –4 dB points, and centers the tuning between these points.

The input signal is required to have amplitude stability during the duration of the sweeping portion of the centering operation. This stability must be well under a decibel so that amplitude variations are not mistakenly treated as passband shape variations. The signal must have minimal frequency modulations as well, for similar reasons. While modulations that are well under 1 MHz in width are acceptable, wideband digital modulations can cause tuning errors. Finally, the signal must have a good signal-to-noise ratio.

These constraints on the input signal can be a problem in practical measurement applications, leading to measurements with significantly reduced amplitude accuracy. Centering cannot occur when measuring low-level harmonics, for example. Centering cannot be used to measure spot noise density. It can't work with increasingly common digital communications signals such as OFDM, W-CDMA, or TDMA formats. It can't work with most radar signals.

Thus, while spectrum analyzer specifications for amplitude accuracy only apply following a preselector center operation, such operations are often impractical without the additional centering algorithms and hardware built into the X-Series signal analyzers.

A New Centering Capability

If the analyzer had a full-range CW signal generator to use for preselector centering, the user would never need to provide a suitable signal. Unfortunately, such a capability isn't economically feasible; however by employing a broadband noise generator and a new centering algorithm, centering without strict signal requirements can be accomplished economically. The block diagram for this new approach, used in the X-Series signal analyzers, is shown in Figure 3.

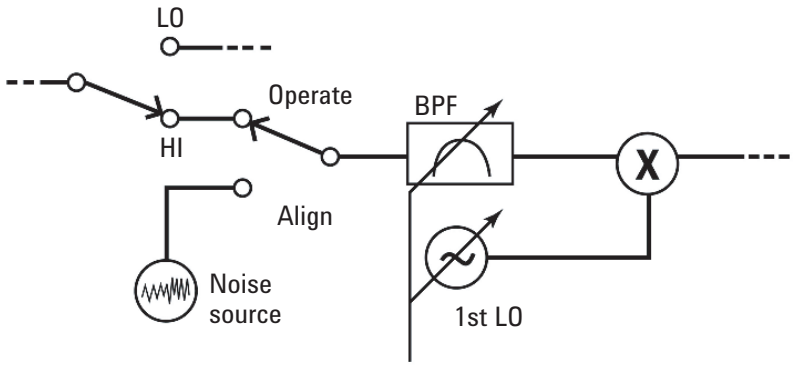

Figure 3: A noise source is added to the block diagram

At first glance, you might think that a noise source wouldn't help tuning. After all, the amount of noise coming out of the filter is nearly independent of the tuning current. But the frequency distribution of that noise does change. The amount of noise that makes it to the IF will vary with the tuning current. See Figure 4.

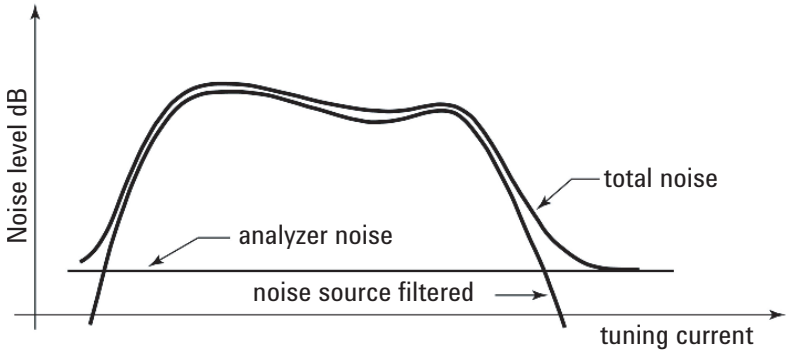

Figure 4: The noise in the IF depends on the analyzer noise floor and the filter tuning

By analyzing the curve of Figure 4, a preselector centering algorithm can center the passband using just the noise source.

Centering can be invoked at every frequency of interest to the user. But the built-in noise source also allows the factory calibration for the overall tuning curve to be implemented in the analyzer and be rerun at will, instead of only on a return to a fully equipped facility. Thus, the effects of aging and (to a much lower level of significance) ambient temperature changes can be removed by running the "characterize preselector" operation occasionally. With a well-characterized preselector, centering is rarely even needed. Not needing to re-center is even more convenient than a centering operation that doesn't require CW-like signals.

Using the X-Series Preselector Centering Capability

Preselector centering should be manually invoked whenever you want the best (specified) amplitude accuracy for signals in the X-Series' high band, or frequencies above 3.6 GHz.

Traditional centering operations require a signal at the frequency of interest, with a level that is within about 30 dB of the analyzer reference level. The analyzer marker is placed on this signal to identify it and the centering algorithm is invoked by a "Presel Center" softkey on the menu associated with the Amplitude hardkey. An alternative, for non-CW signals, is the "Presel Adjust" operation (and softkey of the same name), where the preselector is manually adjusted without the use of the automatic centering algorithm. This adjustment is normally made by "peaking" the amplitude response and, as described above, is not as robust of a technique for achieving the best amplitude accuracy.

Centering operations are virtually identical for the X-Series signal analyzers, except that no external signals are required, and there is no need for switching input signals or for disconnecting/reconnecting cables to the source being measured. The frequency of interest is typically the analyzer's center frequency, and so it is usually not necessary to activate the marker and move it to the signal of interest. Simply press the Amplitude hardkey followed by the "Presel Center" softkey.

The manual "Presel Adjust" function is also available in the X-Series signal analyzers and operates as it would with other spectrum analyzers, but without the need to supply a signal during adjustment.

Note that the preselector is in the signal path (and adjustments are useful) only if the analyzer is operating at frequencies over approximately 3.6 GHz. The preselector centering and adjustment softkeys are "ghosted' and inactive if the analyzer is measuring lower frequencies.

Summary

With the addition of a noise source and a new tuning algorithm, the Keysight X-Series signal analyzers can meet their respective microwave amplitude accuracy specifications in the measurement of all signal types, not just high amplitude nearly-CW signals. For example, in measuring a 40 MHz wide digitally modulated signal at a frequency of 6 GHz, the measurement accuracy without effective preselector centering is not specified and might be worse than –10 dB, while proper centering improves the figure to the warranted ±1.5 dB.

myKeysight
www.keysight.com/find/mykeysight
A personalized view into the information most relevant to you.

www.axiestandard.org
AdvancedTCA® Extensions for Instrumentation and Test (AXIe) is an open standard that extends the AdvancedTCA for general purpose and semiconductor test. Keysight is a founding member of the AXIe consortium.

www.lxistandard.org
LAN eXtensions for Instruments puts the power of Ethernet and the Web inside your test systems. Keysight is a founding member of the LXI consortium.

www.pxisa.org
PCI eXtensions for Instrumentation (PXI) modular instrumentation delivers a rugged, PC-based high-performance measurement and automation system.

Three-Year Warranty
www.keysight.com/find/ThreeYearWarranty
Keysight's commitment to superior product quality and lower total cost of ownership. The only test and measurement company with three-year warranty standard on all instruments, worldwide.

Keysight Assurance Plans
www.keysight.com/find/AssurancePlans
Up to five years of protection and no budgetary surprises to ensure your instruments are operating to specification so you can rely on accurate measurements.

www.keysight.com/quality
Keysight Electronic Measurement Group
DEKRA Certified ISO 9001:2008
Quality Management System

Keysight Channel Partners
www.keysight.com/find/channelpartners
Get the best of both worlds: Keysight's measurement expertise and product breadth, combined with channel partner convenience.

For more information on Keysight Technologies' products, applications or services, please contact your local Keysight office. The complete list is available at:
www.keysight.com/find/contactus

Americas	
Canada	(877) 894 4414
Brazil	55 11 33 51 7010
Mexico	001 800 254 2440
United States	(800) 829 4444
Asia Pacific	
Australia	1 800 629 485
China	800 810 0189
Hong Kong	800 938 693
India	1 800 112 929
Japan	0120 (421) 345
Korea	080 769 0800
Malaysia	1 800 888 848
Singapore	1 800 375 8100
Taiwan	0800 047 866
Other AP Countries	(65) 6375 8100
Europe & Middle East	
Austria	0800 001122
Belgium	0800 58580
Finland	0800 523252
France	0805 980333
Germany	0800 6270999
Ireland	1800 832700
Israel	1 809 343051
Italy	800 599100
Luxembourg	+32 800 58580
Netherlands	0800 0233200
Russia	8800 5009286
Spain	800 000154
Sweden	0200 882255
Switzerland	0800 805353
	Opt. 1 (DE)
	Opt. 2 (FR)
	Opt. 3 (IT)
United Kingdom	0800 0260637

For other unlisted countries:
www.keysight.com/find/contactus
(BP-05-12-14)

This document was formerly known as application note 1586.

This information is subject to change without notice.
© Keysight Technologies, 2009 - 2014
Published in USA, July 31, 2014
5989-4946EN
www.keysight.com