Keysight Technologies and Academia
Electronic Measurement Solutions for Teaching Labs

Committed to helping you teach the engineers of tomorrow

Selection Guide

KEYSIGHT TECHNOLOGIES

Table of Contents

1. Introduction 3

2. Keysight University Teaching Solutions
   - General Electronics
     - Analog Electronics Teaching Solution 4
     - Analog Circuit Design Teaching Solution 5
     - Electronic Instrumentation and Measurement Teaching Solution 6
   - RF Microwave and Wireless Communications
     - RF Circuit Design Teaching Solution 7
     - Digital RF Communications Teaching Solution 8
     - EMI and EMC Teaching Solution 9
     - Antenna & Propagation Teaching Solution 10
   - Digital and Embedded Systems
     - Digital Systems Teaching Solution 11
     - Digital Signal Processing Teaching Solution 12
     - Embedded System Design Teaching Solution 13
     - Microcontroller System Design Teaching Solution (8051) 14

3. Solutions Matrix 15

4. Software, Connectivity and Hardware 16

5. Obtaining Measurement Instruments 18

6. Resources, Partnerships and Collaboration 19

Introduction

As the world's premier measurement company, Keysight Technologies, Inc. works in close collaboration with engineers, scientists, and researchers around the globe to meet the communications, electronics, life sciences, and chemical analysis challenges of today and tomorrow. Keysight is committed to providing innovative measurement solutions that enable our electronics and bio-analytical customers and partners—the leaders in their fields—to deliver the products and services that make a measurable difference in the lives of people everywhere. Keysight works closely with academia, government, and industry to provide the tools that enable development of new technology.

Keysight University Teaching Solutions

This selection guide is intended for university lecturers who need to develop new engineering courses or teaching labs. Keysight's University Teaching Solution includes Keysight's instruments and software, teaching slides, lab sheets and training kits. This complete solution will provide students with early exposure to industry-grade instruments and software. The teaching solutions are in a ready-to-teach package, which saves lecturers' time in developing and updating courses to keep pace with the latest industry trends.

Analog Electronics Teaching Solution

Providing students with real-world semiconductor knowledge and applications.

34405A digital multimeter

33210A/33220A function/ arbitrary waveform generator

DSOX2002A oscilloscope

E3631A power supply

U3001A training kit

E3631A power supply

U2701A USB modular oscilloscope
U2761A USB modular function generator
U2741A USB modular digital multimeter

Features:

- Teaching slides on Analog Electronics
  - Suitable for Electrical & Electronics Engineering, Mecha-tronics, Instrumentation & Control Engineering or Robotics classes.
  - Focuses on semiconductor fundamentals as well as circuit analysis and applications.
  - Sufficient to cover 1 semester's curriculum subject on Analog Electronics.
  - Covers theoretical topics such as P-N junction & semiconductor diode, Bi-polar Junction Transistor (BJT), DC Biasing, transistor modeling, Small Signal Analysis, Field-effect transistor, Operational Amplifier, multi-vibrators, voltage regulators and oscillators.
  - Slides are in editable format for easy editing.
  - Covers theoretical topics for instrumentation.
- Test & Measurement Instruments
  The lab experiments are designed to work with small footprint USB modular instruments or bench-top
  - U2701A USB Modular Oscilloscope, U2761A USB Modular Function Generator, U2741A USB Modular Digital Multimeter and E3631A Power Supply OR
  - 33210A/33220A Function/ Arbitrary Waveform Generator, E3631A Power Supply, DSOX2002A Oscilloscope and 34405A Digital Multimeter.
  - Use of industry grade instruments provides students with hands-on exposure.
  - Various options available for specific needs.
  - Standard and common instruments that can be shared with other labs.
  - Can also be used for research activities.
- Training kit
  - Designed specifically for class room labs to guide students on analog components functions.
  - Consists of Diode & Transistor module and Op-amp module.
  - Allow students to develop practical knowledge based on subjects learnt in lectures.
  - Works seamlessly with Keysight's instruments.
- Lab sheets
  - Guided steps and procedures to be used with the Training Kit and Keysight's instruments.
  - Lab sheets are in editable format.
  - Sufficient to cover 1 semester's practical exercise on Analog Electronics.
  - Lab sheets complement theoretical teaching topics.
  - Experiment topics include:
    1. Diode characteristics
    2. Rectifier circuit
    3. BJT characteristics
    4. DC biasing
    5. Practical Op-amp circuits
    6. FC Class A tuned amplifier analysis
    7. 555 multi-vibrator circuit
    8. Active Filter
  - Problem-based assignments.

To get more information on the Analog Electronics Lab Station, visit **www.keysight.com/find/TeachAnalog**

Analog Circuit Design Teaching Solution

Focuses on the areas of practical analog circuit analysis, design, and its applications.

34405A digital multimeter

33210A/33220A function/ arbitrary waveform generator

DSOX2002A oscilloscope

E3631A power supply

U3002A training kit

E3631A power supply

U2701A USB modular oscilloscope
U2761A USB modular function generator
U2741A USB modular digital multimeter

Features:

- Teaching slides on Analog Circuit Design
  - Suitable for Analog Circuit Design classes.
  - Covers theoretical topics such as Resistor-Capacitor-Inductor Based Circuits, Review of Practical Circuit Analysis Techniques, Op-Amp Based Circuits Design and Bipolar Junction Transistor & MOSFET Circuits Design.
  - Slides are in editable format for easy editing.
- Test & Measurement Instruments
  The lab experiments are designed to work with small footprint USB modular instruments or bench-top.
  - U2701A USB Modular Oscilloscope, U2761A USB Modular Function Generator, U2741A USB Modular Digital Multimeter and E3631A Power Supply OR
  - 33210A/33220A Function/Arbitrary Waveform Generator, E3631A Power Supply, DSOX2002A Oscilloscope and 34405A Digital Multimeter.
  - Standard and common instruments that can be shared with other labs.
  - Use of industry grade instruments provides students with hands-on exposure.
- Training kit
  - Consists of various standard circuits that can be used as building blocks to develop complete designs without the need to start from scratch.
  - The embedded audio player provides the flexibility to generate simple to complex audio signals.
  - Works seamlessly with Keysight's instruments.
- Lab sheets
  - Guided steps and procedures to be used with the Training Kit and Keysight's instruments.
  - Lab sheets are in editable format.
  - Sufficient to cover 1 semester's practical exercise on Analog Circuit Design.
  - Lab sheets complement theoretical teaching topics.
  - Experiment topics include:
    1. Designing a Voltage Regulator
    2. Designing an IR Transceiver Circuit
    3. Designing a BJT-based Amplifier
    4. Designing a FET-based Amplifier
    5. Designing Op-Amp based Precision Circuits
    6. Designing an Audio Equalizer
    7. Designing a High Sensitivity IR Detector
    8. Designing a High Precision Voltage Regulator

To get more information on the Analog Circuit Design Teaching Solution, visit **www.keysight.com/find/TeachAnalogCircuit**

Electronic Instrumentation and Measurement Teaching Solution

Excellent teaching solution for students to understand an end-to-end measurement system, which includes various sensors, signal conditioning circuits, op-amp circuits, and digital I/Os.

34405A digital multimeter

33210A/33220A function/ arbitrary waveform generator

DSOX2002A oscilloscope

E3631A power supply

U3003A training kit

E3631A power supply

VEE software

U2701A USB modular oscilloscope
U2761A USB modular function generator
U2741A USB modular digital multimeter

Features:

- Teaching slides on Electronic Instrumentation & Measurement
  - Suitable for Electrical, Microelectronics, Robotics, or Electronic Design classes.
  - Sufficient to cover 1 semester's curriculum subject on Electronic Instrumentation and Measurement Techniques. It can also be used for Induction Program on Practical Measurement using Basic Instruments.
  - Covers theoretical topics such as Basic Principles of Measurement, Measurement of Electrical Quantities, Quality of Measurement, Sensors and Transducers, Analog Signal Conditioning, Electronic Measurement Instruments, Introduction to Instrument Systems and The Basics of Instrument Programming Using VEE.
  - Slides are in editable format for easy editing.
  - Covers theoretical topics for instrumentation.
- Test & Measurement Instruments
  The lab experiments are designed to work with small footprint USB modular instruments or bench-top.
  - U2701A USB Modular Oscilloscope, U2761A USB Modular Function Generator, U2741A USB Modular Digital Multimeter and E3631A Power Supply OR
  - 33210A/33220A Function/Arbitrary Waveform Generator, E3631A Power Supply, DSOX2002A Oscilloscope and 34405A Digital Multimeter.
  - Uses VEE software, a graphical language programming software that makes programming simple.
  - Use of Industrial grade instruments provides students with hands-on exposure.
  - Various options available for specific needs.
  - Standard and common instruments that can be shared with other labs.
  - Equipment and software can also be used for research activities.
- Training kit
  - On-board circuits can be viewed easily, allowing students to understand how circuits are built and connected.
  - Allow students to develop practical knowledge based on subjects learnt in lectures.
  - Works seamlessly with Keysight's instruments.
- Lab sheets
  - Guided steps and procedures to be used with the Training Kit and Keysight's instruments.
  - Lab sheets are in editable format.
  - Sufficient to cover 1 semester's practical exercise on Electronic Instrumentation and Measurement Techniques.
  - Lab sheets complement theoretical teaching topics.
  - Experiment topics include:
    1. Using a Power Supply
    2. Using a Digital Multimeter
    3. Using a Function/Arbitrary Waveform Generator
    4. Using an Oscilloscope
    5. Measurement of Voltage and Current
    6. Measurement of Time-Dependent Signals
    7. Quality of Measurement 1
    8. Quality of Measurement 2
    9. Analog Signal Conditioning
    10. Measurement of Digital Signals
    11. Introduction to Data Flow Programming
    12. Measurement Automation
  - Problem-based assignments.

To get more information on the Electronic Instrumentation and Measurement Teaching Solution, visit **www.keysight.com/find/TeachInstrumentation**

RF Circuit Design Teaching Solution

This lab solution is carefully designed to explore the basics of RF circuits and communication.

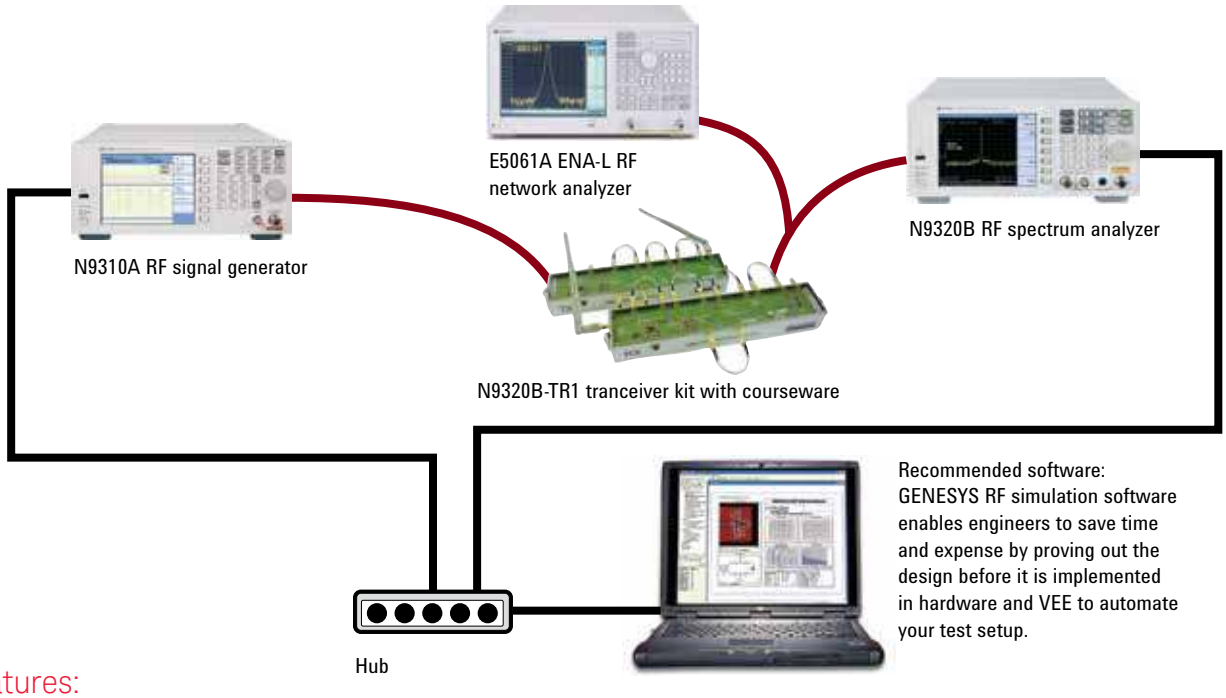

Features:

- Teaching slides on RF Circuit Design
  - Suitable for RF & Communications Engineering, Telecommunications Engineering or Electronics Engineering classes.
  - Sufficient to cover 1 semester's curriculum subject on RF Circuit Design.
  - Covers theoretical topics such as transmission line theory, RF/ microwave network analysis, impedance transformation and matching, RF components analysis, and Small Signal Amplifier (SSA) theory and design.
  - Slides are in editable format for easy editing.
- Test & Measurement Instruments
  - Recommended setup for a complete Lab includes N9310A RF Signal Generator, N9320B RF Spectrum Analyzer, E5061A Vector Network Analyzer, N8973A Noise Figure Analyzer, N4000A Noise source, W1410L GENESYS RF Design & Simulation Software, and Keysight VEE Software.
  - Use of Industrial grade instruments provides students with hands-on exposure.
  - Various options available for specific needs.
  - Standard and common instruments that can be shared with other labs.
  - VEE Programming software simplifies test automation.
  - GENESYS software allows for RF simulation and analysis.
  - Equipment and software can also be used for research activities.
- Training kit
  - The RF Transceiver training kit contains various RF modules forming the transmitter and receiver sections.
  - Each module can be studied independently, or can be mixed and matched with the other modules to form a subsystem.
  - Allow students to develop practical knowledge on Power Amplifier, Low Noise Amplifier, Mixer, Filter and Oscillator.
  - CAE design files in GENESYS format.
  - Works seamlessly with Keysight's instruments.
- Lab sheets
  - Guided steps and procedures to be used with the Training Kit and Keysight's instruments.
  - Sufficient to cover 1 semester's practical exercise on RF Circuit Design.
  - Lab sheets complement theoretical teaching topics.
  - Experiment topics include:
    1. Scalar Offset calibration.
    2. Power Amplifier Characterization – Gain, isolation, return loss, harmonic distortion
    3. Low Noise Amplifier Characterization – Gain, isolation, return loss, SWR, impedance
    4. Filter Characterization – Insertion loss, bandwidth, rejection
    5. Mixer Characterization – Conversion loss, RF-to-IF isolation, SWR, return loss.
    6. Synthesizer Characterization – Phase noise, frequency
    7. Antenna characterization – Gain,SWR, return loss, impedance
    8. Keysight Genesys RF – Introduction to Genesys RF and Microwave Design Software, Impedance Matching with Lumped and Distributed Elements, RF Low-Pass and Band-Pass Filter Design, Distributed Directional Coupler Design, Low-Noise Amplifier Design, Single-Ended Down Conversion Mixer Design, RF Oscillator Design, Introduction to System Simulation.
  - Problem-based assignments.

To get more information on the RF Circuit Lab Station, visit **www.keysight.com/find/TeachRF**

Digital RF Communications Teaching Solution

Expose students to digital communication signals theoretical learning with practical hands-on labs.

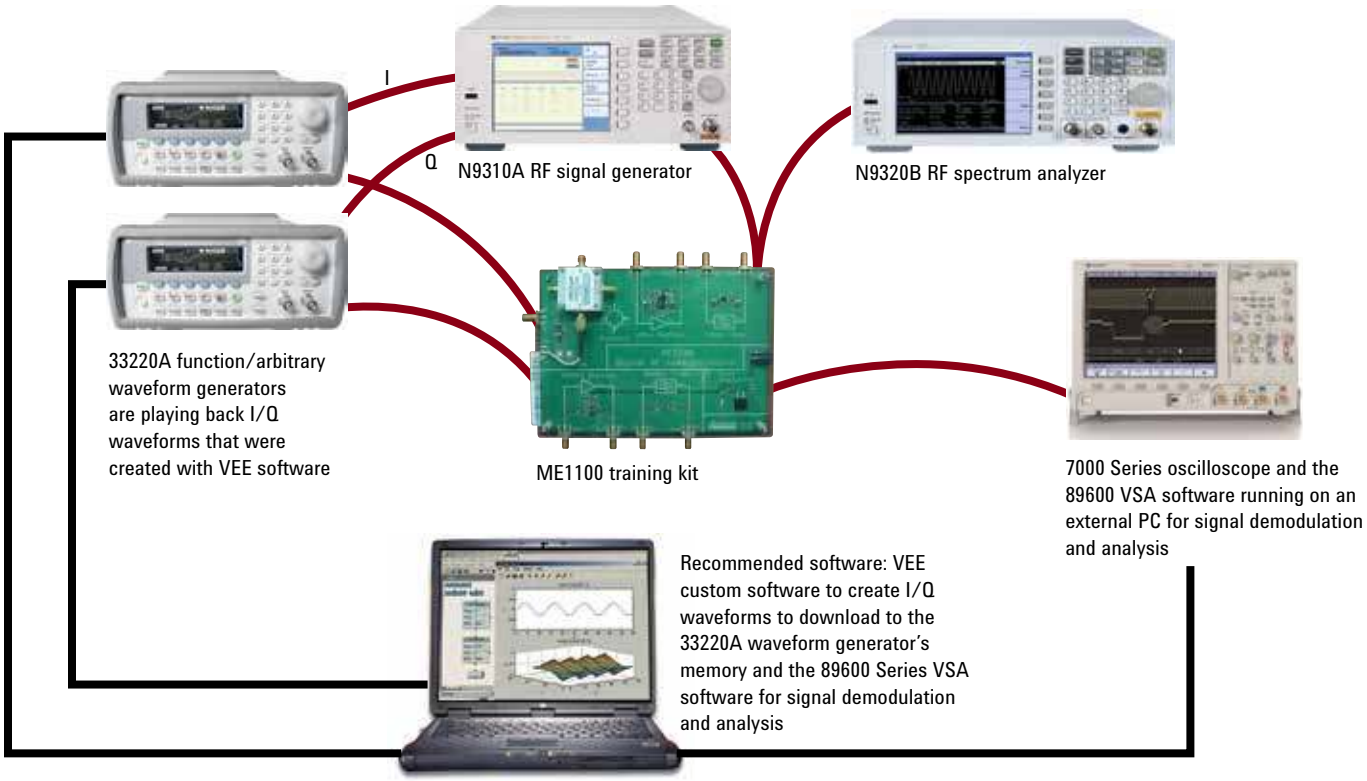

Features:

- Teaching slides on Digital RF Communications
  - Suitable for RF & Communications Engineering, Telecommunications Engineering or Electronics Engineering classes.
  - Sufficient to cover 1 semester's curriculum subject on Digital RF Communications.
  - Covers theoretical topics such as Principles of Communications, Amplitude and Frequency modulation, Digital Modulation techniques, Transmitter and Receiver architectures.
  - Slides are in editable format for easy editing.
- Test & Measurement Instruments
  - Recommended setup for a complete Lab includes 33220A Function/ Arbitrary Waveform Generator, N9310A RF Signal Generator, N9320B RF Spectrum Analyzer, DSO7000 Digital Oscilloscope, 89600 VSA Software, and Keysight VEE Software.
  - Use of Industrial grade instruments provides students with hands-on exposure.
  - Various options available for specific needs.
  - Standard and common instruments that can be shared with other labs.
  - VEE Programming software simplifies test automation.
  - VSA software allows for RF simulation and analysis.
  - Equipment and software can also be used for research activities.
- Training kit
  - Allow students to understand effects of Amplifier and Filter on the output signal.
  - Allow students to generate and analyze standard modulation formats (BPSK, QAM, FSK) and wireless communication standards (GSM, DECT, CDMA).
  - Works seamlessly with Keysight's instruments.
- Lab sheets
  - Guided steps and procedures to be used with the Training Kit and Keysight's instruments.
  - Sufficient to cover 1 semester's practical exercise on Digital Communications.
  - Lab sheets complement theoretical teaching topics.
  - Experiment topics include:
    1. Maximum output power verification
    2. Spurious and harmonics signal measurement
    3. Occupied bandwidth measurement
    4. Modulation quality measurement (EVM, IW offsets, GSM signal)
    5. Harmonics analysis for GSM signal
  - Problem-based assignments to allow further practical knowledge development.

To get more information on the Digital RF Communications Lab Station, visit **www.keysight.com/find/TeachDigitalRF**

EMI and EMC Teaching Solution

A ready-to-teach package covers the sources of EMI, fundamental theories, design practices to minimize EMI and EMI measurements.

DSOX2022A Series oscilloscope

ME1400 training kit

N9912A FieldFox RF analyzer

Features:

- Teaching slides on EMI and EMC
  - Suitable for Electromagnetic Interference and Electromagnetic Compatibility classes.
  - Covers theoretical topics such as EMC fundamentals, Sources of electromagnetic interference, EMC regulations & standards, Measurement instruments usage and Good PCB design practices.
  - Slides are in editable format for easy editing.
  - Covers theoretical topics for instrumentation.
- Test & Measurement Instruments
  - Recommended setup for a complete Lab includes N9912A Portable RF Analyzer and DSOX2022A 200 MHz Oscilloscope.
  - Use of industry grade instruments provides students with hands-on exposure.
  - Equipment and software can also be used for research activities.
- Training kit
  - Consists of two modules — an EMI source module and an EM coupling module. Allowing students to understand the cause and effect of EMI in today's high-speed PCB board design.
  - Able to analyze EMI from commonly found sources, such as a DC motor, high frequency signals, and high speed digital pulses generated by the EMI source module.
  - Designed specifically for classroom labs to guide students on instrumentation fundamentals.
- Lab sheets
  - Guided steps and procedures to be used with the Training Kit and Keysight's instruments.
  - Lab sheets are in editable format.
  - Designed to enable students to perform various types of EMI/EMC measurements using industry-grade instruments.
  - Each lab exercise highlights an EMI mechanism, factors affecting that mechanism, and mitigation/suppression methods.
  - Experiment topics include:
    1. Probing Techniques
    2. Digital Pulse Spectra and Rise Time Measurement
    3. Controlling Crosstalk: Frequency Domain Perspective
    4. Controlling Crosstalk: Time-Domain Perspective
    5. Controlling Common Impedance Coupling
    6. Controlling Radiated Emission from Cable and PCB
    7. PCB Signal Integrity
    8. Transfer Impedance Measurement

To get more information on the EMI and EMC Teaching Solution, visit **www.keysight.com/find/eachEMI**

Antenna and Propagation Teaching Solution

A ready-to-teach package in the areas of antenna fundamentals, practical antenna design, and antenna measurement techniques.

Features:

- Teaching slides on Antenna and Propagation
  - Suitable for Telecommunications engineering or Antenna design classes.
  - Focuses on antenna fundamentals, practical antenna design, and antenna measurement techniques.
  - Sufficient to cover 1 semester's curriculum subject on Antenna and Propagation.
  - Covers theoretical topics such as Introduction to Antennas, Antenna Parameters and Antenna Measurements, Microstrip Patch Antenna Design, Introduction to Wi-Fi, Bluetooth, and ZigBee and Portable Device Antennas.
  - Slides are in editable format for easy editing.
  - Covers theoretical topics for instrumentation.
- Test & Measurement Instruments
  - Recommended setup for a complete Lab includes N9912A Keysight Portable RF Analyzer.
  - Use of Industrial grade instruments provides students with hands-on exposure.
  - Various options available for specific needs.
  - Standard and common instruments that can be shared with other labs.
  - Equipment and software can also be used for research activities.
- Training kit
  - Designed specifically for class room labs to guide students in the area of RF design and Telecommunications.
  - Consists of e transmitter module and the receiver module.
  - The Radiation Pattern Plotting (RadPat) software is also included with the training kit.
  - Allow students to develop practical knowledge based on subjects learnt in lectures.
  - Works seamlessly with Keysight's instruments.
- Lab sheets
  - Guided steps and procedures to be used with the Training Kit and Keysight's instruments.
  - Lab sheets are in editable format.
  - Sufficient to cover 1 semester's practical exercise on Antenna and Propagation.
  - Lab sheets complement theoretical teaching topics.
  - Experiment topics include:
    1. Familiarizing with the ME1300
    2. Antenna Impedance Measurement
    3. Radiation Pattern Measurement
    4. Antenna Gain Measurement
    5. Polarization Measurement
    6. Free Space Propagation
    7. Comparison of Antenna's Characteristics
    8. Scale Model Measurement
  - Problem-based assignments.

To get more information on the Antenna and Propagation Teaching Solution, visit **www.keysight.com/find/TeachAntenna**

Digital Systems Teaching Solution

An excellent teaching aid for your Digital Systems classroom, utilizing Keysight's performance oscilloscope, Altera's Development and Education Board, and teaching material for both lecturers and students.

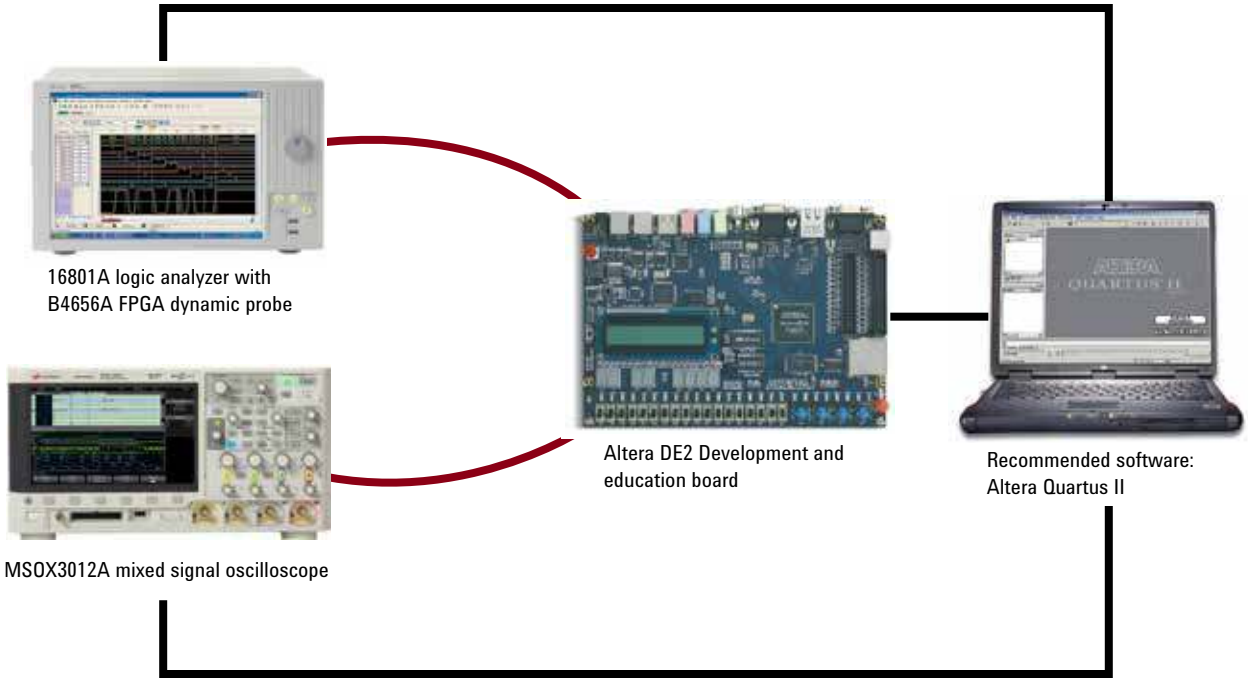

Features:

- Teaching slides on Digital Systems
  - Suitable for Electronics Engineering, Robotics, Mecha-tronics, or Control Engineering classes.
  - Sufficient to cover 1 semester's curriculum subject on Digital Systems.
  - Covers theoretical topics such as Logic Circuits design, Combinational and Sequential Circuits, Programmable Logic Devices (PLD), and Verilog Design for FPGA implementation.
  - Slides are in editable format for easy editing.

- Test & Measurement Instruments
  - Recommended setup for a complete Lab includes MSOX3012A Mixed Signal Oscilloscope, 16801A Logic Analyzer, B4656A FPGA Dynamic Probe for 16801A.
  - Use of Industrial grade instruments provides students with hands-on exposure.
  - Various options available for specific needs.
  - Standard and common instruments that can be shared with other labs.
  - Equipment can also be used for research activities.

- Training Kit
  - Utilizes Altera DE1 or DE2 Development and Educational Board.
  - Enable students to implement typical digital system designs with various on-board I/O interfaces.
  - Works seamlessly with Keysight's instruments.

- Lab sheets
  - Guided steps and procedures to be used with the Training Kit and Keysight's instruments.
  - Sufficient to cover 1 semester's practical exercise on Digital Systems.
  - Lab sheets complement theoretical teaching topics.
  - Experiment topics include:
    1. Basic Logic design
    2. Serial Data and waveform generation
    3. Design optimization and pipelining
    4. Verilog design and simulation
    5. I/O Core interfacing and analysis
    6. Memory interfacing and analysis
  - Problem-based assignments to allow further practical knowledge development.

To get more information on the Digital Systems Lab Station, visit **www.keysight.com/find/TeachDigitalSystems**

Digital Signal Processing Teaching Solution

An out-of-box solution for teaching digital signal processing, simulation, and hardware implementation using an FPGA platform.

MSOX3012A mixed signal oscilloscope

Altera DE2 development and education board

Recommended software:
Altera Quartus II, Altera DSP Builder and Matlab Simulink

Features:

- Teaching slides on Digital Signal Processing (DSP)
  - Suitable for Electronics Engineering, Robotics, Mecha-tronics, or Control Engineering classes.
  - Sufficient to cover 1 semester's curriculum subject on DSP.
  - Covers theoretical topics such as Signal characteristics and digitization, Frequency Domain Analysis, Z-transform and filtering concepts, FIR and IIR Filter design, FPGA for DSP systems and Real-time DSP with FPGA.
  - Slides are in editable format for easy editing.

- Test & Measurement Instruments
  - Recommended setup for a complete Lab includes MSOX3012A Mixed Signal Oscilloscope and E5383A single-ended 17 channel Flying Leads.
  - Use of Industry grade instruments provides students with hands-on exposure.
  - Various options available for specific needs.
  - Standard and common instruments that can be shared with other labs.
  - Equipment can also be used for research activities.

- Training Kit
  - Utilizes Altera DE2 Development and Educational Board and DSP Builder.
  - Enable students to implement typical digital signal processing designs with various on-board I/O interfaces.
  - Works seamlessly with Keysight's instruments.

- Lab sheets
  - Guided steps and procedures to be used with the Training Kit and Keysight's instruments.
  - Sufficient to cover 1 semester's practical exercise on DSP.
  - Lab sheets complement theoretical teaching topics.
  - Experiment topics include:
    1. Time and Frequency Domain analysis
    2. Sampling Theorem and quantization
    3. Z-transform and filtering concepts
    4. FIR & IIR Filter design and implementation
    5. Real-time DSP
    6. Digital Signal generator
    7. FFT analyzer
  - Problem-based assignments to allow further practical knowledge development.
  - Requires Matlab software with Simulink and Signal Processing Blockset (not included).

To get more information on the Digital Signal Processing Lab Station, visit **www.keysight.com/find/TeachDSP**

Embedded System Design Teaching Solution

A ready-to-teach package in 32-bit ARM-based processor system design, programming, and applications.

MSOX3012A mixed signal oscilloscope

ME2100 training kit

Features:

- Teaching slides on Embedded System Design
  - Suitable for Embedded System Design class.
  - Focuses on ARM processor fundamentals, ARM hardware architecture, programming and applications.
  - Sufficient to cover 1 semester's curriculum subject on Embedded System Design.
  - Covers theoretical topics such as ARM Processor Programmer Model, ARM and Thumb Instruction Set, ARM Exceptions Handling and Vectored Interrupt Controller, ARM AMBA Bus, ARM Memory System and Introduction to the Embedded Operating System.
  - Slides are in editable format for easy editing.
  - Covers theoretical topics for instrumentation.
- Test & Measurement Instruments
  - Recommended setup for a complete Lab includes MSOX3012A Mixed Signal Oscilloscope.
  - Use of Industrial grade instruments provides students with hands-on exposure.
  - Various options available for specific needs.
  - Standard and common instruments that can be shared with other labs.
  - Equipment and software can also be used for research activities.
- Training Kit
  - 2 training kits available: ARM9 and Cortex-M3.
  - Enable students to work on typical ARM-based projects and assignments with various on-board I/O interfaces.
  - Utilizes open source GNU-based ARM toolchain software for code entry, compilation and debugging.
  - Allow students to develop practical knowledge based on subjects learnt in lectures.
  - Works seamlessly with Keysight's instruments.
- Lab sheets
  - Guided steps and procedures to be used with the Training Kit and Keysight's instruments.
  - Lab sheets are in editable format.
  - Sufficient to cover 1 semester's practical exercise on Embedded System Design.
  - Lab sheets complement theoretical teaching topics.
  - Experiment topics include:
    1. Eclipse IDE for the Embedded ARM9 Development Board
    2. Assembly Programming for ARM
    3. Assembly Programming for Cortex-M3
    4. Introduction to C Programming
    5. ARM I/O Programming
    6. ARM Interrupt Programming
    7. ARM Peripherals Programming
    8. Introduction to Embedded Operating System Programming
    9. LCD interfacing
    10. Timer UART
  - Problem-based assignments.

To get more information on the Antenna and Propagation Teaching Solution, visit **www.keysight.com/find/TeachEmbeddedSystem**

Microcontroller System Design Teaching Solution

A ready-to-teach package in microcontroller fundamentals, programming languages, and applications.

MSOX3012A mixed signal oscilloscope

ME2000 training kit micro controller module

ME2000 training kit temperature control module

ME2000 training kit user interface module

ME2000 training kit elevator simulation module

Features:

- Teaching slides on Microcontroller System Design
  - Suitable for Electrical, Microelectronics, Robotics, or Electronic Design classes.
  - Focuses on microcontroller fundamentals, programming languages, and applications.
  - Sufficient to cover 1 semester's curriculum subject on 8051 Microcontroller Systems Microprocessor and Interfacing Systems.
  - Covers theoretical topics such as Introduction to Microcontroller, 8051 Microcontroller and the Assembly Language, I/O, Timer, and Counter Operations, Serial Port Operations, Interrupt Operations and C Programming for 8051.
  - Slides are in editable format for easy editing.
  - Covers theoretical topics for instrumentation.
- Test & Measurement Instruments
  - Recommended setup for a complete Lab includes MSOX3012A Mixed Signal Oscilloscope.
  - Use of Industrial grade instruments provides students with hands-on exposure.
  - Various options available for specific needs.
  - Standard and common instruments that can be shared with other labs.
  - Equipment and software can also be used for research activities.
- Training Kit
  - Enable students to work on various 8051-based projects and assignments.
  - Consists of the 8051 Microcontroller Module and three application modules (Elevator Simulator, User Interface, and Temperature Control).
  - Allow students to develop practical knowledge based on subjects learnt in lectures.
  - Works seamlessly with Keysight's instruments.
- Lab sheets
  - Guided steps and procedures to be used with the Training Kit and Keysight's instruments.
  - Lab sheets are in editable format.
  - Sufficient to cover 1 semester's practical exercise on 8051 Microcontroller Systems Microprocessor and Interfacing Systems.
  - Lab sheets complement theoretical teaching topics.
  - Experiment topics include:
    1. Familiarizing with the 8051 Microcontroller Module
    2. Arithmetic, Logical, and Branching Operations
    3. I/O Operations
    4. LCD Interfacing
    5. External Memory Interfacing
    6. DC Motor, Proximity Sensor, and 7-Segment Display Interfacing
    7. Elevator Simulation
    8. ADC and DAC Interfacing Operating System Programming
  - Problem-based assignments.

To get more information on the Microcontroller System Design Teaching Solution, visit **www.keysight.com/find/TeachMPU8051**

Solutions Matrix

Below is a summary of Keysight's University Teaching Solutions and the recommended instruments and software for the respective labs.

	Subjects and Applications	Power Supply	Digital Multimeter	Function Generator	Digital Signal Oscilloscopes	Mixed Signal Oscilloscope	Network Analyzer	Logic Analyzer	Signal Generator	Spectrum Analyzer	Noise Figure Analyzer	Keysight VEE	89600 VSA Software	ADS/Genesys
General Electronics	Analog Electronics http://www.keysight.com/find/TeachAnalog	■	■	■	■									
	Analog Circuit Design http://www.keysight.com/find/TeachAnalogCircuit	■	■	■	■									
	Instrumentation and Control Systems http://www.keysight.com/find/TeachInstrumentation	■	■	■	■						■	■		
RF Microwave and Wireless Communications	Digital RF Communications http://www.keysight.com/find/TeachDigitalRF			■	■				■	■			■	
	RF Circuit Design http://www.keysight.com/find/TeachRF						■		■	■	■			■
	Antenna and Propagation http://www.keysight.com/find/TeachAntenna						■		■					
	EMI and EMC http://www.keysight.com/find/TeachEMI				■		■			■				
Digital and Embedded Systems	Digital Systems http://www.keysight.com/find/TeachDigitalSystems					■		■						
	Digital Signal Processing http://www.keysight.com/find/TeachDSP					■								
	Embedded System Design http://www.keysight.com/find/TeachEmbeddedSystem					■								
	Microcontroller System Design (8051) http://www.keysight.com/find/TeachMPU8051					■								

FREE pre-written lab experiments on the most popular subjects available from **www.keysight.com/find/freelabs**

Software, Connectivity and Hardware

In addition to high quality hardware, Keysight also provides software and connectivity solutions.

Software

Keysight provides software that complements and augments the measurement hardware. The hardware solutions typically come with free software utilities to help simplify instrument operation. Keysight provides software for your entire design and test cycle – from simulation up to analysis and display of the data. Below is a small sampling of the software that Keysight provides.

–Automation and control

- Keysight VEE Pro is graphical language programming software that makes programming simple. It works seamlessly with hardware and software from virtually all companies, so you can feel confident that your program is flexible, expandable and compatible with the latest industry standards. www.keysight.com/find/vee

–SystemVue ESL software

- SystemVue is a focused electronic design automation (EDA) environment for electronic system-level (ESL) design. It enables system architects and algorithm developers to innovate the physical layer (PHY) of wireless and aerospace/defense communications systems and provides unique value to RF, DSP, and FPGA/ASIC implementers. As a dedicated platform for ESL design and signal processing realization, SystemVue replaces general-purpose digital, analog, and math environments. www.keysight.com/find/systemvue

–RF circuit and device simulation

- GENESYS – low cost, easy to use electronic design automation (EDA) software for RF simulations. It enables designers to prove out the design first in software before implementing it in hardware.
- Advanced Design Software (ADS) – EDA software for RF simulation with the most flexibility and capability. www.keysight.com/find/eesof

–Signal creation for arbitrary waveform generators

- Signal Studio – create test signals for wireless devices that are based on common cellular and wireless networking communication standards or customized signals. www.keysight.com/find/signalstudio

–Vector signal analysis

- The 89600 VSA software is powerful PC-based software offering the industry's most sophisticated general purpose and standards specific signal evaluation and troubleshooting tools for the R&D engineer. Reach deeper into signals, gather more data on signal problems, and gain greater insight. www.keysight.com/find/89600

–Utility software applications for individual instruments

- IntuiLink – utility that launches a tool bar in Microsoft® Word and/or Excel software that enables waveform creation, data logging and analysis, screen shot capture, remote control and more.

–Easy instrument connectivity with Keysight Open

- Many of Keysight's instruments are based on open industry standards computer/instrument connectivity.

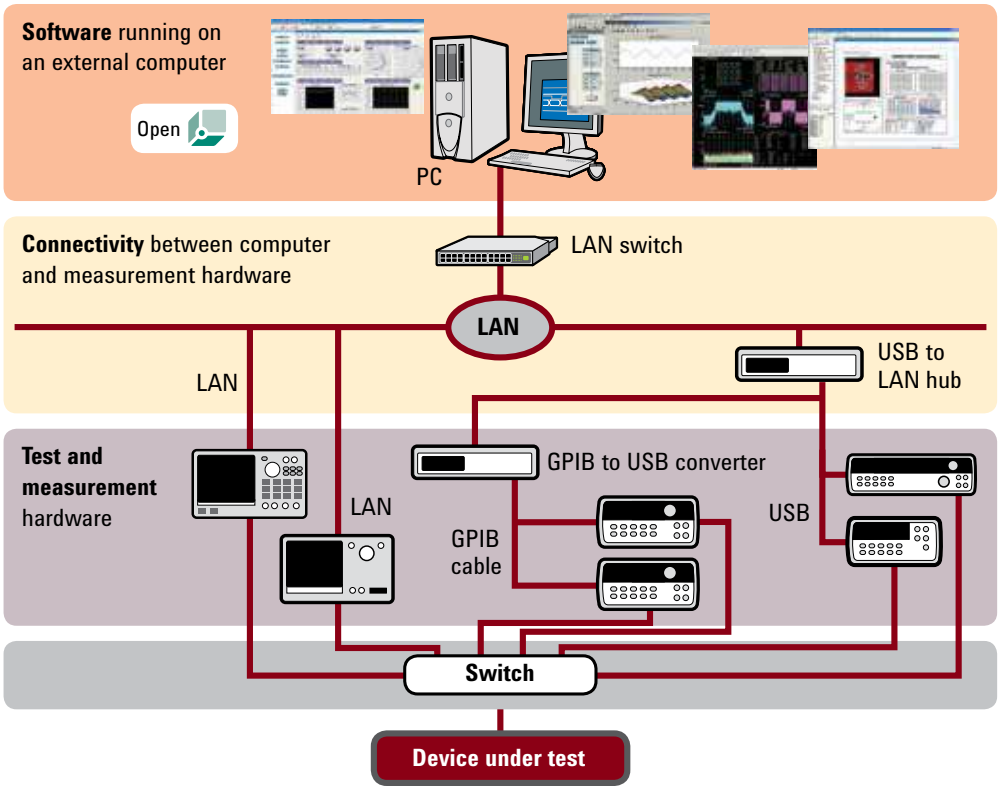

Computer/instrument connectivity

Keysight pioneered instrument-to-computer connectivity in 1970, creating the HPIB (Hewlett-Packard Interface Bus) interface which was later standardized as the general purpose interface bus (GPIB). With a GPIB instrument, a special interface card needs to be installed in your PC to enable connection to the PCI bus. Alternatively, you can use the Keysight 82357B USB to GPIB converter to connect directly from the instrument to the USB interface on the PC.
www.keysight.com/find/connectivity

Newer instruments now come with USB and LAN interfaces, which enable you to connect directly to your PC without having to install any special hardware on your computer. LXI is a new connectivity standard, which provides robust connectivity via LAN. LXI Class C instruments have an internal web server for remote access and control. This is useful for distance learning.
www.keysight.com/find/lxi

Obtaining Measurement Instruments

Affordable measurement solutions for teaching and research labs

Keysight's measurement products have a long history of use in teaching and research labs. Keysight offers the widest selection of test equipment in industry.

It is the same affordable, full-featured set of test and measurement tools used by professionals, which better prepares students for when they transition into industry.

- Software, data acquisition, test systems
- Oscilloscopes, analyzers, meters
- Generators, sources, supplies
- Nanoscale microscopy, positioning and optics
- Lightwave, optical test equipment
- Wireless device test sets and wireless solutions
- Wireline communications test equipment

Wide range of purchase options

Alternative financing options such as leasing or longer-term rentals are available through Keysight's finance partners.

Rent – If you need the latest technology for only a few months to run a specialized test, rent it.

Lease – By leasing instead of buying, you acquire the latest technology and capabilities without the risks associated with equipment ownership. Pay little or nothing initially and pay fixed payments for the contract term. We can also structure your lease plan to include software and services or modify it as your business needs change.

Where can you find low-cost Keysight equipment that's still in its prime?

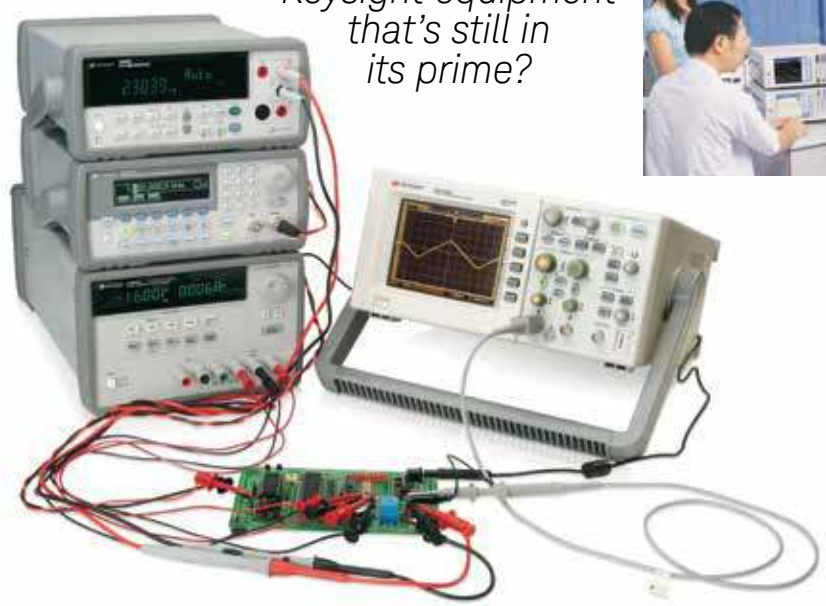

Finance – If you cannot make a large capital investment, work with one of Keysight's financing partners to spread your investment while making payments at a competitive rate. Preserve capital for other opportunities. You can also finance software and third-party hardware and services.

www.keysight.com/find/financial_solutions

Save even more money with Keysight CertiPrime

Fully remanufactured test equipment

Buy fully remanufactured test equipment that is like new, except for the price. It costs less but still has the same performance as if it were new. These refurbished products cost 20% to 50% less than our new products. All products come with the same warranty, support, return policy, and standard accessories as new models, plus the latest compatible firmware and software.

Sell or trade your old equipment

Why not sell or trade it in on updated equipment – whether they're ours or another vendor's. You'll boost available cash or receive credit you can use as money down on new products and services.

www.keysight.com/find/certiprime

Distributors provide fast delivery

Get fast product delivery working through Keysight's authorized distributors. Our distributors work in close collaboration with Keysight to provide the solutions you need. Some Keysight products are only available through an Keysight authorized distributor.

www.keysight.com/find/distributors

Resources, Partnerships and Collaboration

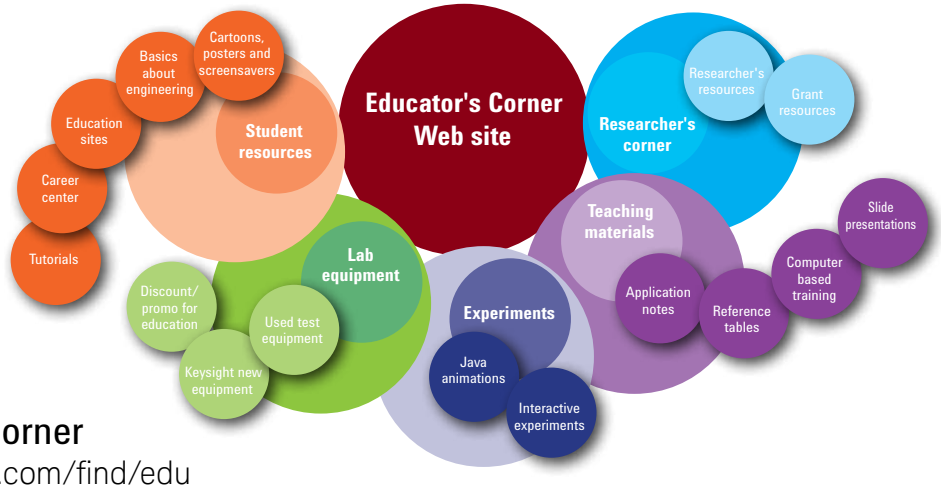

Educator's Corner

www.keysight.com/find/edu

Free resources are available from the Educator's Corner Web site, which contains downloadable teaching material, experiments, information about lab equipment, and more.

Free resources from Educator's Corner Web portal

Educator's Corner is a dedicated Web site that provides a one-stop education resource to lecturers, researchers and students looking to enhance their higher education curriculum and research capabilities. Various tools and resources can be downloaded for free.

- Teaching tools
- Lab experiments
- Java animations
- Computer based training
- Application notes
- Webcast seminars
- Journal articles
- Engineering cartoons
- Student resources
- Information on educational discounts and promotions

www.keysight.com/find/edu

Research partnerships and collaboration

As the world's premier measurement company and a committed global citizen, Keysight takes an active role in supporting higher education and research.

We are committed to furthering science and technology by developing strategic partnerships with universities and research labs worldwide. We work with these universities to develop technology in areas of mutual interest.

www.keysight.com/find/research

Jobs for students and new graduates

Keysight builds relationships with universities to recruit top talent college hires. Each year, we hire hundreds of the best students around the world for internships and full-time employment. The new ideas that college hires bring to Keysight challenges the status quo by testing long-held beliefs. This clash of ideas ignites the spark of innovation.

www.keysight.com/go/jobs

Special programs, promotions and discounts

Keysight collaborates with universities and creates special programs to meet their needs: assistance with laboratory openings, mutual positive exposure through communications, and industry networking opportunities.

www.keysight.com/find/eupromo

Order your FREE updated, Research Resources DVD, Educator's Corner CD-ROM and posters

FREE!

Educator's Corner CD
www.keysight.com/find/edutools

Research Resources DVD
www.keysight.com/find/researchDVD

www.lxistandard.org

LAN eXtensions for Instruments puts the power of Ethernet and the Web inside your test systems. Keysight is a founding member of the LXI consortium.

Keysight Assurance Plans
www.keysight.com/find/AssurancePlans
Up to five years of protection and no budgetary surprises to ensure your instruments are operating to specification so you can rely on accurate measurements.

www.keysight.com/quality
Keysight Technologies, Inc.
DEKRA Certified ISO 9001:2008
Quality Management System

Keysight Channel Partners
www.keysight.com/find/channelpartners
Get the best of both worlds: Keysight's measurement expertise and product breadth, combined with channel partner convenience.

www.keysight.com/find/edu

For more information on Keysight Technologies' products, applications or services, please contact your local Keysight office. The complete list is available at:
www.keysight.com/find/contactus

Americas

Canada	(877) 894 4414
Brazil	55 11 3351 7010
Mexico	001 800 254 2440
United States	(800) 829 4444

Asia Pacific

Australia	1 800 629 485
China	800 810 0189
Hong Kong	800 938 693
India	1 800 112 929
Japan	0120 (421) 345
Korea	080 769 0800
Malaysia	1 800 888 848
Singapore	1 800 375 8100
Taiwan	0800 047 866
Other AP Countries	(65) 6375 8100

Europe & Middle East

Austria	0800 001122
Belgium	0800 58580
Finland	0800 523252
France	0805 980333
Germany	0800 6270999
Ireland	1800 832700
Israel	1 809 343051
Italy	800 599100
Luxembourg	+32 800 58580
Netherlands	0800 0233200
Russia	8800 5009286
Spain	0800 000154
Sweden	0200 882255
Switzerland	0800 805353
	Opt. 1 (DE)
	Opt. 2 (FR)
	Opt. 3 (IT)
United Kingdom	0800 0260637

For other unlisted countries:
www.keysight.com/find/contactus
(BP-06-23-14)

This information is subject to change without notice.
© Keysight Technologies, 2012-2014
Published in USA, August 2, 2014
5989-7309EN
www.keysight.com