Keysight Technologies

# Debug Automotive Designs Faster with CAN-dbc Symbolic Trigger

Application Note

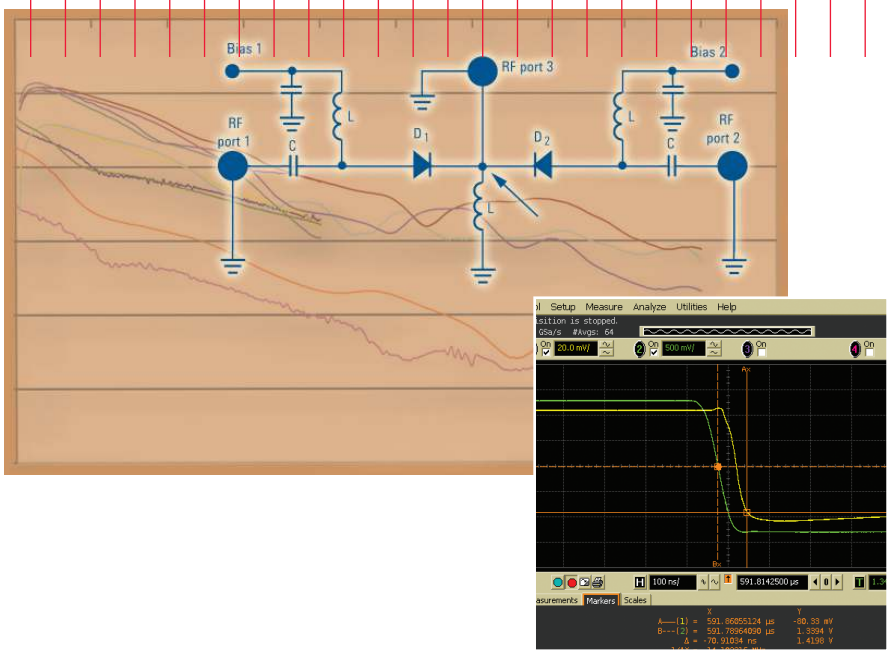


KEYSIGHT TECHNOLOGIES

# Table of Contents


**1.0 Introduction** ..... 3

**2.0 Types of Solid State Switches** ..... 4
- 2.1 PIN diode switches ..... 4
- 2.2 FET switches ..... 10
- 2.3 Hybrid switches ..... 13

**3.0 Solid State Switch Specifications** ..... 14
- 3.1 Operating frequency range ..... 14
- 3.2 Isolation ..... 15
- 3.3 Insertion loss ..... 16
- 3.4 Return loss and VSWR ..... 17
- 3.5 Switching speed ..... 18
- 3.6 Settling time ..... 21
- 3.7 Video leakage ..... 25
- 3.8 Off-port termination ..... 27
- 3.9 Phase tracking ..... 27
- 3.10 Harmonics and intermodulation distortion ..... 28
- 3.11 1 dB compression point ..... 30

**4.0 Applications** ..... 31
- 4.1 Application 1 Mobile handset: power amplifier testing ..... 31
- 4.2 Application 2 Signal routing: multiple-instrument, multiple-DUT testing ..... 33
- 4.3 Application 3 Filter bank: SAW filter testing ..... 35
- 4.4 Application 4 Satellite: testing channel amplifiers with ALC systems ..... 37
- 4.5 Application 5 Base station and satellite: antenna testing ..... 38

**5.0 Conclusion** ..... 39

**6.0 Reference** ..... 39

# 1.0 Introduction

RF and microwave switches are used extensively in microwave test systems for signal routing between instruments and devices under test (DUT). Incorporating a switch into a switch matrix system enables you to route signals from multiple instruments to single or multiple DUTs. This allows multiple tests to be performed with the same setup, eliminating the need for frequent connects and disconnects. The entire testing process can be automated, increasing the throughput in high-volume production environments.

Introduced in the 1960s, the term "solid state" describes electronic devices which contain neither vacuum tubes nor mechanical devices such as relays. In solid state components, electrons flow through unheated solid semiconductor materials, Germanium or Silicon being the most well known, instead of flowing through a heated vacuum as in vacuum tubes. As vacuum tubes were rapidly superseded by transistors, the term "solid state" generally refers to devices that "contain no moving parts."

RF and microwave switches can be categorized into two equally mainstream, and essential groups:

i) Electromechanical switches
ii) Solid state switches

Currently, the micro-electromechanical-systems (MEMS) switch technology is emerging. However, historically the switch market has been dominated by the mature technologies of electromechanical and solid state switches. MEMS switch technology has to overcome problems such as reliability and quality packaging. These switches will need to provide convincing, if not far superior performance, over the two established families of switches, before achieving higher market adoption.

Solid state switches are more reliable and exhibit a longer lifetime than their electromechanical counterparts due to their superior resistance to shock, vibration and mechanical wear. They also offer a faster switching time. However, the higher innate ON resistance of the solid state switches gives them higher insertion loss than electromechanical switches. Therefore solid state switches are preferred in systems where fast switching and long lifetime are essential.

Browsing through the internet would give you some basic information on solid state switches, with minimal definition such as: solid state electrical switches operate without moving parts. This application note will deliver a more comprehensive understanding of solid state switches including: the types of solid state switches, the technologies used to design them, the important parameters to consider when selecting a solid state switch and how to measure them. A comparison of the different types of solid state switches is made as selection parameters are discussed. Finally, a number of application examples are given to illustrate the significance of the parameters and the role of solid state switches in today's demanding test and measurement systems.

# 2.0 Types of Solid State Switches

There are three main types of solid state switches:

- PIN diodes switches
- Field-effect transistors (FET) switches
- Hybrid (FET and PIN diode) switches

## 2.1 Pin diode switches

### Pin diode

A PIN diode is a semiconductor device that operates as a variable resistor at RF and microwave frequencies. Its resistance value varies from less than 1 Ω (ON) to more than 10 kΩ (OFF) depending on the amount of current flowing through it. As a current-controlled device, the resistance is determined only by the forward biased DC current. When the control current is switched on and off, the PIN diode can be used for switching. An important feature of the PIN diode in switching applications is its ability to control large RF signals while using much smaller levels of DC excitation.

### Forward biased

The PIN diode structure consists of an intrinsic (I) layer with very high resistivity material sandwiched between regions of highly doped positively (P) charged and negatively (N) charged material as shown in Figure 1a. When the PIN diode is forward biased, positive charges from the P region and negative charges from the N region are injected into the I layer. These charges do not recombine immediately. Instead, a finite quantity of charge always remains stored and results in a lowering of the I-region resistance. The resistance of the PIN diode under forward bias, $R_s$, is inversely proportional to the total forward bias current, $I_f$., making the PIN diode perfect for achieving excellent isolation at high frequencies. Figure 2 shows a typical $R_s$ vs. If graph of a PIN diode. Figure 1(b) shows the equivalent circuit with the PIN diode forward biased. L is the parasitic inductance which depends on the geometrical properties of the package.

## Reverse biased

With reverse or zero biasing, the I layer is depleted of charges and the PIN diode exhibits very high resistance ($R_P$) as shown in Figure 1(c). CT is the total capacitance of the PIN diode which is the sum of the diode junction capacitance ($C_J$) and the parasitic capacitance ($C_P$) of the package. This capacitance limits the switch's performance at high frequencies in the form of insertion loss and isolation degradation. A low capacitance diode helps to improve performance at higher frequencies.

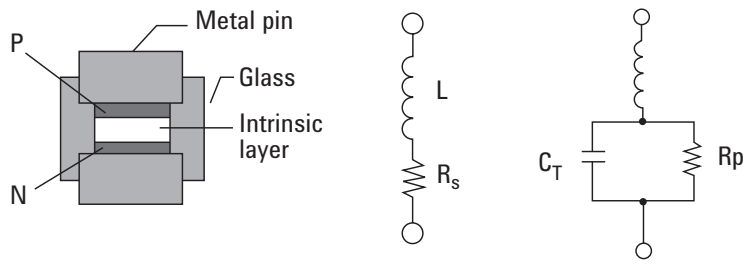


(a) Cross section of a basic diode (b) Forward bias (c) Reverse bias

*Figure 1. PIN diode switches*

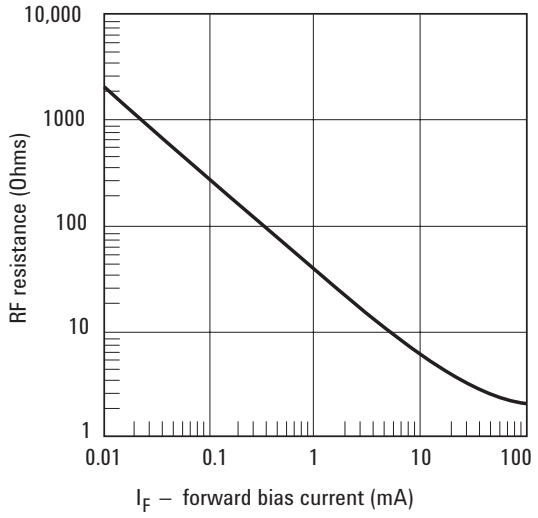


*Figure 2. Typical $R_s$ vs. If graph of a PIN diode*

PIN diode characteristics, such as: high switching speed, low package parasitic reactance and small physical size compared to a signal wavelength, make them ideal for use in broadband switch design. The performance of PIN diode primarily depends on chip geometry and the nature of the semiconductor material used in the finished diode, particularly in the I region.

## Lower frequency limitation of PIN diode switches

### Forward biased

The key limitation of a PIN diode switch is its lower frequency limit. The forward biased PIN diode is a current controlled resistor when forward biased. The resistance of the I region under forward bias, $R_s$ is inversely proportional to the stored charge $Q = I_f\tau$ where $I_f$ is the forward current and $\tau$ is the recombination time or carrier lifetime.

$$R_S = \frac{W^2}{(\mu_p + \mu_n)Q} = \frac{W^2}{(\mu_p + \mu_n)I_f\tau} \text{ ohms}$$

where
W = I-region width
$\mu_p$ = hole mobility
$\mu_n$ = electron mobility

This equation is valid for frequencies higher than the transit time frequency of the I region, defined as $f_{transit} = 1300/W^2$ (f in MHz and W in microns). At frequencies less than $f_{transit}$, the PIN diode acts like a PN-junction diode and rectifies the RF signal, making the PIN diode unsuitable for use at these frequencies. $f_{transit}$ typically ranges from a few kHz to 1 MHz.

### Reverse biased

The reverse bias equivalent circuit consists of the PIN diode capacitance ($C_T$), a shunt loss element, (Rp), and the parasitic inductance (Ls). $C_T$ is the total capacitance consisting of the junction capacitance $C_J$ and package capacitance $C_P$

$$C_J = \frac{\varepsilon A}{W}$$

which is valid for frequencies above the dielectric relaxation frequency of the I region.

$$f_d = \frac{1}{2\pi\rho\varepsilon}$$

$\varepsilon$ = dielectric constant of I-region material
A = diode junction area
W = I-region thickness
$\rho$ = resistivity of I region

At frequencies much lower than $f_d$, the capacitance characteristic of the PIN diode resembles a varactor diode. Changes and variations in the capacitance affect the usefulness of PIN diode as a switch at lower frequencies.

This is why PIN diode switches have low frequency limitations.

## PIN diode switch design

PIN diodes are often used to design a switch that controls the path of RF signals. Depending on the performance requirements, the switch can consist of all series diodes, all shunt diodes or a combination of series and shunt diodes.

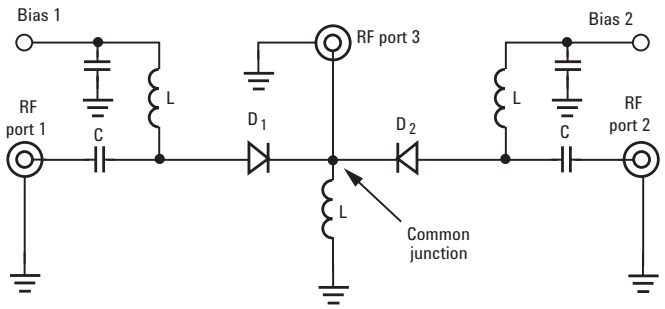


*Figure 3a. Series pin SPDT switch [1]*

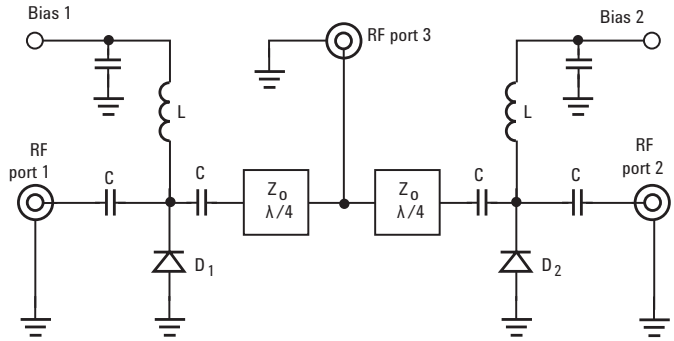


*Figure 3b. Shunt pin SPDT switch*

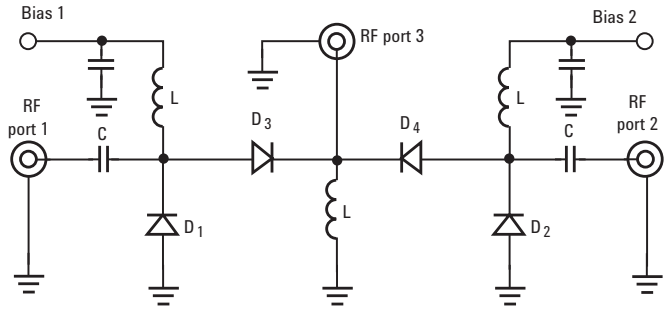


*Figure 3c. Series-shunt pin SPDT switch*

Series pin diodes (Figure 3a) are capable of functioning within a wide bandwidth, which is limited by the biasing inductors and DC blocking capacitors. Also, when PIN diodes are reverse biased, parasitic capacitance gives rise to poor isolation at microwave frequencies, with a 6 dB per octave roll-off as a function of frequency.

Shunt pin diodes (Figure 3b) feature high isolation relatively independent of frequency. To turn a switch on, PIN diodes are reversed, and this means a dominant reverse biased capacitance exists. Circuit designers commonly use a circuit transmission line to create series lumped inductance to achieve a low pass filter effect which enables the switch to work up to the desired frequency.

However, shunt diodes switches have limited bandwidth arising from the use of quarter wavelength transmission lines between the common junction and each shunt diode. At the midband frequency $f_o$, where the transmission lines are $\lambda/4$ in length, the switch operates as follows: when diode D1 is forward biased and diode D2 is reverse biased, the RF signal flows from port 3 to port 2, and the RF port 1 will be isolated. The $\lambda/4$ line will transform the short circuit at D1 into an open circuit at the common junction, eliminating any reactive loading at that point. However, as the frequency is changed from $f_o$, the transmission lines will change in electrical length, creating a mismatch at the common junction.

To illustrate this, Figure 4 shows a model of two shunt diodes. The PIN diodes are turned on (assume $R_{ON}$ = 1.2 ohms) to shunt the RF signal to ground. In Figure 4a, there is no spacing between the diodes (for explanatory purpose only, it is of course impossible to have zero physical length in between diodes). The isolation is around 32 dB as Figure 5 shows (red trace).

In Figure 4b, a physical spacing of 116 mils (quarter wavelength of 10 GHz at alumina substrate with $K_{effective}$= 6.466) will result in a maximum isolation at 10 GHz. This is shown in Figure 5 as the blue trace. The $\lambda/4$ spacing of 116 mils has transformed the short circuit of the diodes into an open circuit.

$$\frac{\lambda}{4} = \frac{c}{\sqrt{K_{effective}}\,.4.10 \times 10^9} = 116 \text{ mils}$$

where c = $3 \times 10^8$ m/s is the speed of light.

Multiple shunt PIN diodes separated at different midband frequencies can be used to achieve high isolation across a broadband frequency range. This is illustrated in Figure 4c where two additional shunt diodes are spaced at quarter wavelength of 20 GHz (58 mils).

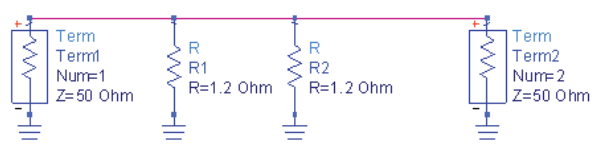


*Figure 4a. PIN diodes with no spacing between diodes*

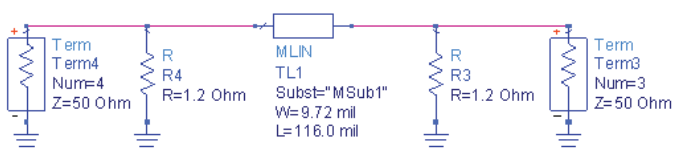


*Figure 4b. Quarter wavelength spacing of shunt PIN diodes*

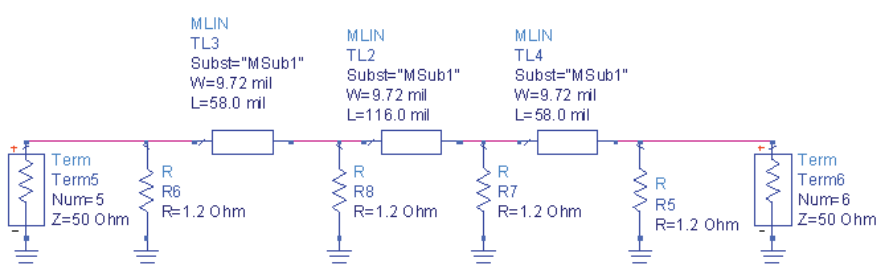


*Figure 4c. Quarter wavelength spacing of shunt PIN diodes with two additional diodes*

As can be seen from the pink trace in Figure 5, the design achieves good isolation up to 20 GHz. Isolation at 20 GHz has improved from around 30 dB (blue trace) to 100 dB (pink trace). However, with more shunt diodes, there will be some degradation in insertion loss and as well as higher current and power consumption.

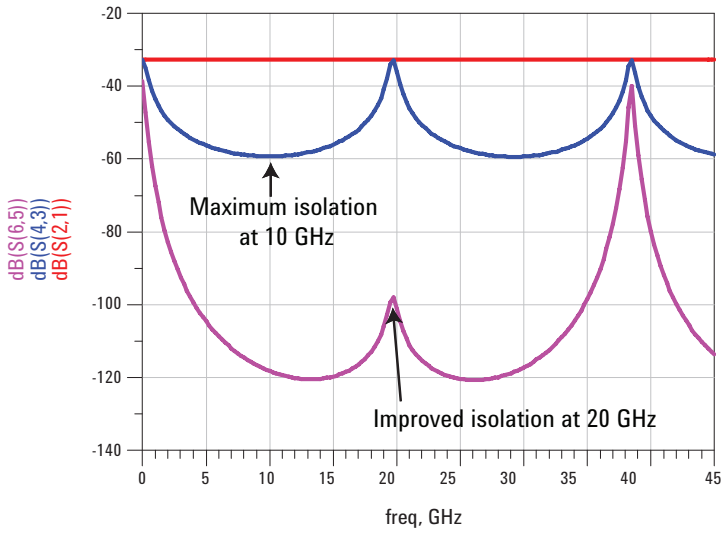


*Figure 5. Isolation performance of different diode spacing and quantity*

Circuit designers often resort to using a combination of both series and shunt diodes to achieve optimal insertion loss and isolation performance in a pin diode switch (Figure 3c). However, this switch is more complicated to design and consumes higher biasing current and power compared to series or shunt PIN diode switches.

Notice that in a PIN diode switch design, the biasing path is connected to the RF path of the switch design. This is unavoidable when designing a PIN diode switch with series PIN diode. DC blocking capacitors are also needed at the RF ports. This will degrade the insertion loss performance of the PIN diode switch at low frequencies due to the high pass filter effect of the capacitor, and at high frequencies due to transmission loss through the capacitor.

RF chokes (inductors) are used along the biasing paths to avoid RF signal leakage while allowing the DC signal to flow through to bias the diodes. The RF choke must have adequately high impedance at low frequencies so that the RF signal will not leak through the biasing path leading to higher insertion loss. At the same time, the RF choke should have a high self resonant frequency to enable broadband switch design.

For power consumption, PIN diode switches with current-controlled PIN diodes always consume higher current than FET switches.

## 2.2 FET switches

### Field-effect transistors (FET)

Field-effect transistors (FETs) are a semiconductor device which depends on an electric field to control the shape and hence the conductivity of a channel in the semiconductor material. FETs control the current between source and drain connections by a voltage applied between the gate and source. FET switches are very stable and repeatable due to good control of the drain-to-source resistance ($R_{DS}$).

Figure 6a shows the low channel resistance between drain and source ($R_{DS} = R_{ON}$) that occurs when the FET is biased ON by the switching voltage. Low channel resistance enables these switches to operate at low frequencies (down to DC).

The application of a reverse-biasing voltage between gate and source causes the depletion region at that junction to expand, thereby "pinching off" the channel between source and drain through which the controlled current travels. In the off state, as shown in Figure 6b, the conduction channel is depleted (pinched off), which causes the FET to exhibit very high resistance ($R_{OFF}$). This mechanism ensures that FET switches provides excellent isolation at low frequencies.[1]

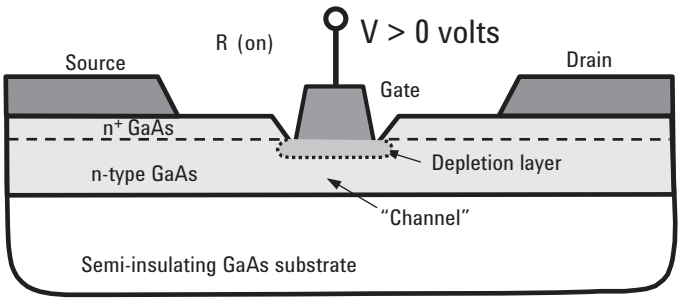


*Figure 6a. Low channel resistance*

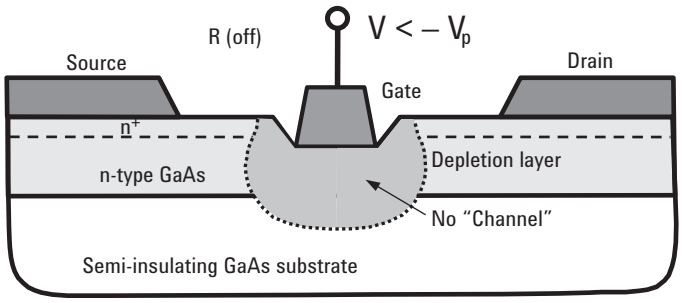


*Figure 6b. High channel resistance*

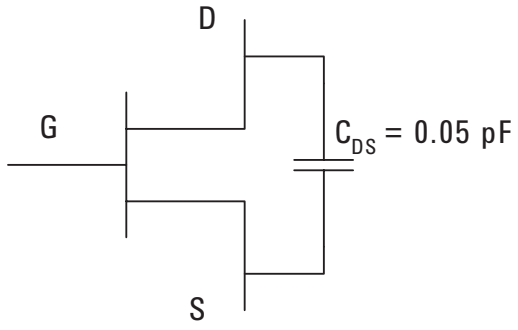


*Figure 6c. Schematic of a FET*

The isolation of FET switches degrades at higher frequencies due to the effect of drain-to-source capacitance ($C_{DS}$). Figure 6(c) shows a Gallium Arsenide (GaAs) metal-semiconductor field-effect transistor (MESFET) schematic, with the equation below showing the drain-to-source impedance as equal to 320 Ω at 10 GHz. This is equivalent to an isolation of only 10.5 dB between the drain and the source, which is clearly not sufficient to satisfy isolation performance.

Assume $C_{DS}$ = 0.05 pF ; f = 10 GHz

$$|X_c| = \left|\frac{1}{j\omega C}\right| = \left|\frac{1}{j2\pi f C}\right| \approx 320\ \Omega$$

## FET switches

Figure 7 shows a simplified schematic diagram of a SPDT switch using FETs. To switch the RF from the common port to RF port 2, FET1 and FET4 are reversed biased so that the channels between source and drain are pinched off; while FET2 and FET3 are forward biased so that low channel resistance exists between drain and source. FET1 and FET3 act as a series device to switch the RF on and off, while FET3 and FET4 are used to shunt away RF that leaks to the off port for better isolation.

Notice that the biasing path is not connected to the RF path of the switch design. This gives FET switch a simpler DC biasing path, eliminating the need for an expensive high-performance RF choke. These chokes are used to reduce the insertion loss that results from the biasing path being connected to the RF path in pin diode switches. Nevertheless, the ON resistance of a FET is typically higher than a PIN diode, resulting in inferior insertion loss performance for FET switches compared to PIN diode switches.

As voltage-controlled devices, FET switches consume much less current than PIN diode switches.

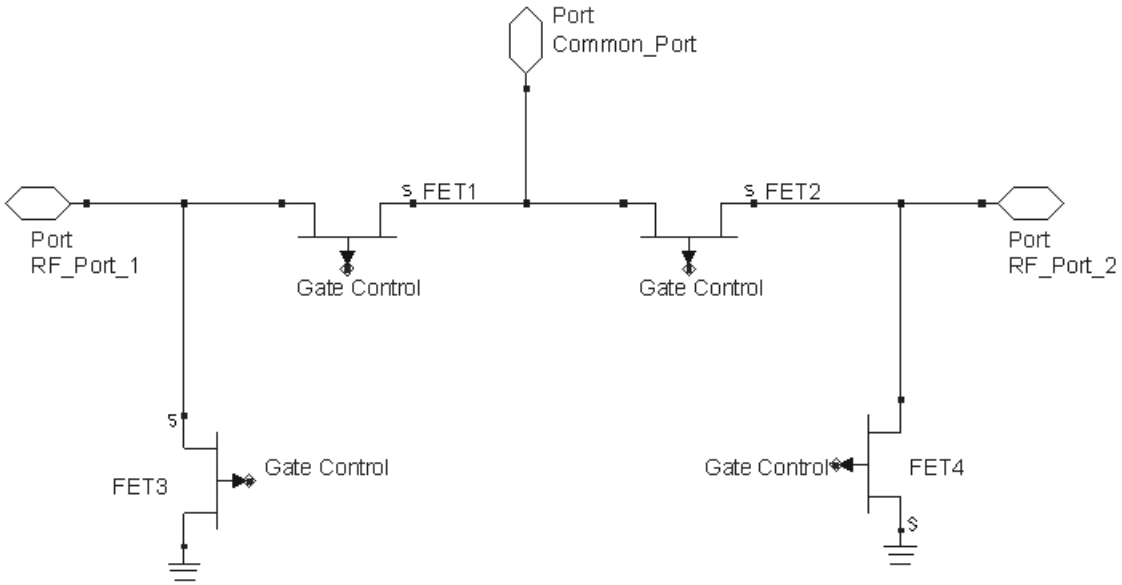


*Figure 7. Simplified SPDT switch using FETs as switching devices*

## 2.3 Hybrid switches

It is clear that both PIN diodes and FETs provide distinctive advantages. However, neither exhibits superior bandwidth and isolation requirements at the same time. So, hybrid switches using FET and PIN diode technology were created to provide wide bandwidth and high performance switching.

Hybrid switches use series FETs to extend the frequency response down to DC with excellent isolation and shunt PIN diodes at λ/4 spacing to provide good isolation at high frequencies. Utilization of series FETs instead of PIN diodes also provides better repeatability performance due to the well controlled $R_{DS}$ ON.

Hybrid switches contain shunt PIN diodes and thus draw a certain amount of current. Nevertheless, the RF path and biasing path should not converge; that might lead to RF leakage in the DC biasing path as with PIN diodes.

The previous sections discussed the different types of solid state switches. Table 1 summarizes the general performance of the different types of solid state switches; a surface comparison with electromechanical mechanical switches is shown as well.

*Table 1. General performance for different types of solid state switches*

| | **Solid state switches** | | | **Electromechanical switches** |
|---|---|---|---|---|
| | **Pin diode** | **FET** | **Hybrid** | |
| Frequency range | from MHz | from DC | from kHz | from DC |
| Insertion loss | Medium (Roll off at low frequencies) | High (Roll off at high frequencies) | High (Roll off at high frequencies) | Low |
| Isolation | Good at high frequencies | Good at low frequencies | Good at high frequencies | Good across broad frequency range |
| Repeatability | Excellent | Excellent | Excellent | Good |
| Switching speed | Fast | Average | Average | Slow |
| Power handling | Low | Low | Low | High |
| Operating life | High | High | High | Medium |
| Power consumption | High | Low | Moderate | Current interrupt feature reduces current consumption |
| Sensitive to | RF power overstress, temperature | RF power overstress, temperature | RF power overstress, temperature | Vibration |
| Keysight switch examples | P9400/2/4 85331 /2 | U9397, U9400 | | L series, 8710x/20x |

# 3.0 Switch Specifications

## 3.1 Operating frequency range

As consumer technologies push the use of the frequency spectrums to their limits, broadband switches undeniably have an upper hand over narrowband designs. Test systems with broadband accessories increase test system flexibility by extending frequency coverage. This reduces costs and saves resources.

Consider this case, you are currently running a test system that tests GSM and UMTS products at 2.2 GHz now want to test WLAN products at 5 GHz. In this case, you would need to buy equipment to extend the frequency of the system to 5 GHz or more. Equipment such as network analyzers which commonly run on a broadband basis, are less likely to be the limitation. On the other hand, accessories such as switches might be a constraint. Keysight Technologies, Inc. offers a series of broadband accessories. By early adoption of broadband accessories, you can save the time and cost required to extend the capability and frequency range of your test systems.

Keysight Technologies has standard broadband solid state switches operating from 300 kHz to 50 GHz. The switches are carefully designed to meet broadband requirements while accomplishing excellent RF performance. The 85331B/32B PIN diode switches operate from 45 MHz to 50 GHz with excellent RF performance while U9397, U9400 hybrid FET switches offer astounding RF performance from 300 kHz to 18 GHz. The PIN diode families of P9400, P9402 and P9404, offer outstanding performance from 100 MHz to 18 GHz.

*Table 2. Frequency range comparison of solid state switches*

| | PIN diode switches | FET switches | Hybrid switches |
|---|---|---|---|
| Lower frequency limit* | 100 MHz | DC | 300 kHz |
| Upper frequency limit* | > 50 GHz | > 20 GHz | > 20 GHz |

* *Typical. Based on performance requirements.*

## 3.2 Isolation

Isolation is defined as the ratio of the power level when the switch's path is "off" to the power level when the switch is "on". In other words, it is the suppression of a signal in excess of the insertion loss at the "off" port.

High isolation in switches is crucial in most measurement applications. Good isolation prevents stray signals from leaking into the desired signal path.

High isolation is especially critical in measurement systems where signals are consistently being routed to and from a variety of sources and receivers through various switch test ports. If these stray signals are allowed to get through, measurement integrity is severely compromised.

PIN diode switches typically offer better isolation performance at high frequencies than FET switches due to the FETs' drain-source capacitance when the FET is turned off. However, this disadvantage can be resolved with the hybrid design by using shunt PIN diodes for isolation.

PIN diode switch isolation is poorer than FET switches at lower frequencies, around tens of MHz, due the low frequency limitations of PIN diodes. From the point of view of a circuit designer, this can be improved by proper selection of the pin diodes, examining the I-region characteristics and optimization of the I-region thickness of the PIN diode design.

*Table 3. Isolation performance comparison of solid state switches*

| | PIN diode switches | FET switches | Hybrid switches |
|---|---|---|---|
| Isolation at low frequencies (100 MHz range) | Average | Excellent | Excellent |
| Isolation at high frequencies (18 GHz range) | Excellent | Average | Excellent |

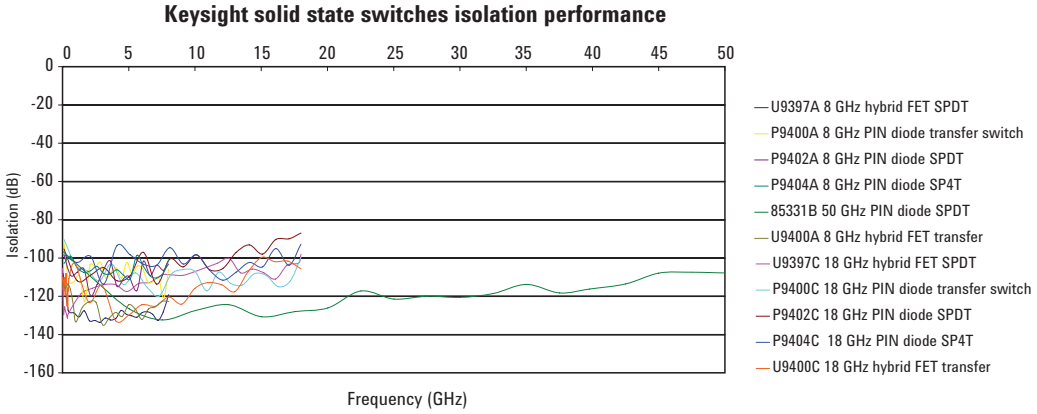


*Figure 8. Keysight solid state switches—typical isolation performance*

## 3.3 Insertion loss

Insertion loss, expressed in decibels (dB), of a switch is determined by measuring the power loss of a signal that is sent in through the common port and out from the port that is in the "ON" state.

Insertion loss plays an important role in many applications. In receiver applications, the effective sensitivity and dynamic range of the system is lowered by insertion loss. In system applications where the additional power needed to compensate for the loss is not available (amplifiers in particular), insertion loss will be a critical specification of a switch.

Insertion loss in solid state switches is generally attributed to three factors.

1. Resistance losses due to the finite resistance of series connected components, particularly PIN diodes and finite "Q" capacitors.
2. VSWR losses due to mismatch at the terminals of the switch or within the switch. With proper matching compensation techniques, mismatches can be reduced.
3. Conductor or transmission line loss within the switch itself due to the presence of microstrip, coaxial line or wave-guide inter-connection lines.

Switches also get more "lossy" as the number of arms or throws of the switch increases. Other factors that contribute to extra insertion loss include off-arm terminations and video filters.

As previously discussed, PIN diode switches typically have higher insertion loss at low frequencies due to the sharing of DC biasing and RF paths, while FET switches have higher insertion loss performance at higher frequencies due to the higher ON resistance of FETs.

*Table 4. Insertion loss performance comparison of solid state switches*

| | PIN diode switches | FET switches | Hybrid switches |
|---|---|---|---|
| Insertion loss | Excellent | Good | Average |

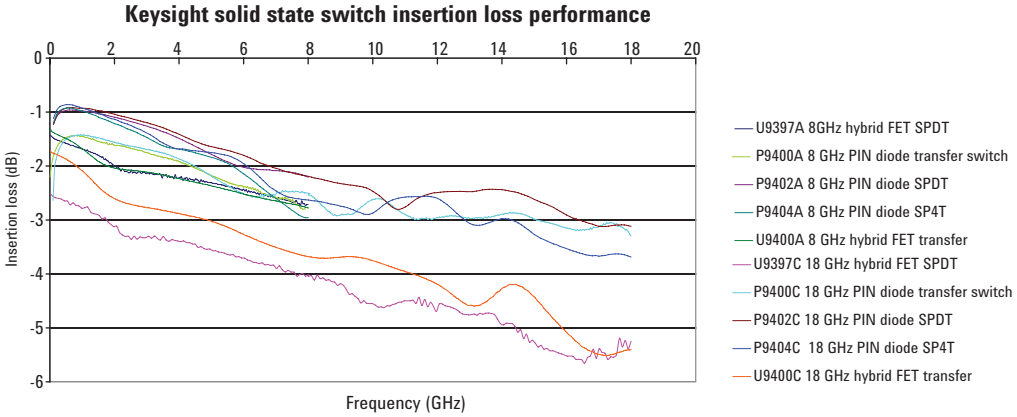


*Figure 9. Keysight solid state switches—typical insertion loss performance*

## 3.4 Return loss and VSWR

Return loss, expressed in dB, is a measure of voltage standing wave ratio (VSWR). Return loss is caused by impedance mismatch between circuits. At microwave frequencies, the material properties as well as the dimensions of a network element play an important role in determining the impedance match or mismatch caused by the distributed effect.

VSWR is an indicator of reflected waves bouncing back and forth within the transmission line; this increases RF losses. Mismatched impedances increase SWR and reduce power transfer. If VSWR is high, higher power in the transmission line also leaks back into the source, which might potentially causes it to heat up or oscillate. Solid state radios which have a lower tolerance for high voltages may automatically reduce output power to prevent damage. Looking from the standpoint of an entire test system, ripples due to the reflection between system accessories and components can be minimized with low VSWR accessories. In optical transmission, circuits which have high VSWR network elements are much more prone to inter symbol interference (ISI), which causes a low quality of service (QoS).

In solid state switch design, there will be a finite ON resistance whether the designers choose to use FET or PIN diode as the series on-off mechanism. This causes an impedance mismatch which results in poor return loss. FETs, as mentioned, typically have a higher ON resistance than PIN diodes. Keysight switch designs incorporate proper matching circuits to improve the VSWR or return loss of the switch without sacrificing the other specifications of a switch.

All Keysight's P940x, U9387, and U9400 solid state switches guarantee very low VSWR and excellent return loss performance of at least 15 dB (VSWR = 1.43) up to 8 GHz and 10 dB (VSWR = 1.92) up to 18 GHz. This ensures optimum power transfer through the switch and the entire network.

## 3.5 Switching speed

Fast switching speed is important in ATE applications where product testing throughput is vital. It is especially important in applications that require the stacking of multiple switches in series. Another new technology usage is in the automotive industry, namely for adaptive cruise control (ACC) and collision avoidance systems (CAS), where high-frequency transmitting and receiving rates need to be thoroughly analyzed.

### Definition

Switching speed is defined as the time needed to change the state of a switch arm (port) from "ON" to "OFF" or from "OFF" to "ON". Switching speed is often characterized in two ways: rise/fall time and on/off time. Figure 10 shows a timing diagram of a switch and the definitions used to describe the switching time.

Rise time is the time it takes for the detected RF output* to raise from 10% to 90% of the final value, when a switch arm is changed from an "off" state to an "on" state.

Fall time is the time it takes for the detected RF output* to drop from 90% to 10% of the initial value, when a switch arm is changed from an "on" state to an "off" state.

Rise and fall times do not include the switch driver delay time.

ON time is the time period from 50% of the transition of the control signal to 90% of the detected RF output* when the switch arm is changed from an "off" state (isolation) to an "on" state (insertion loss).

OFF time is the time period from 50% of the transition of the control signal to 10% of the detected RF output* when the switch arm is changed from an "on" state (insertion loss) to an "off" state (isolation).

The on and off times include the switch driver propagation delay.

* *Measured using a square law detector*

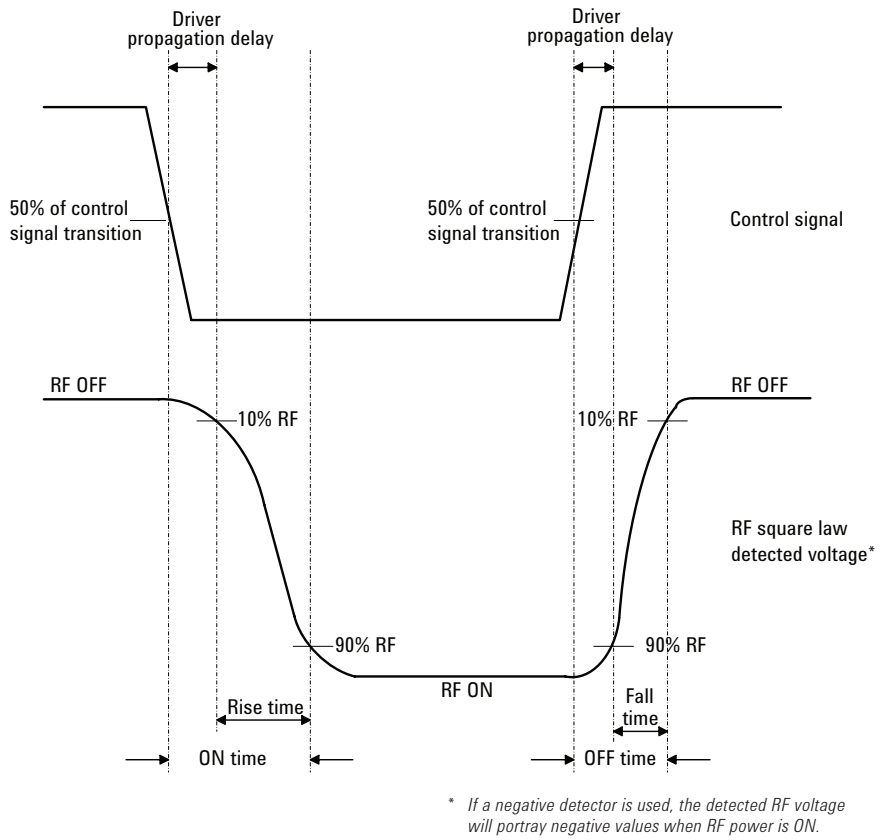


*Figure 10. Timing diagram and definition of switching time of a switch*

Switching time can be measured by using a square law RF detector and an oscilloscope.

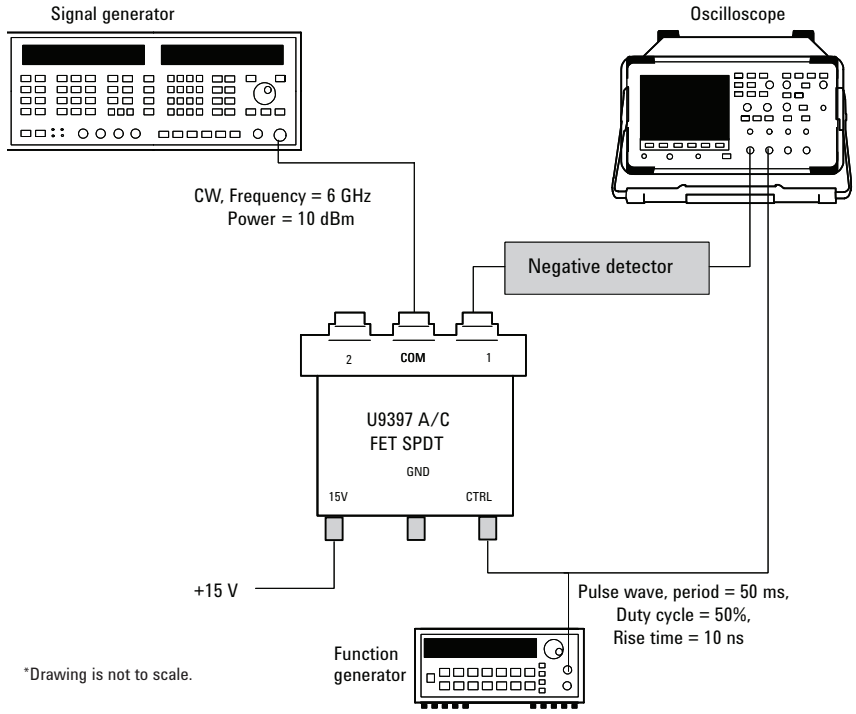


*Figure 11. A typical setup for measuring the switching time of a switch*

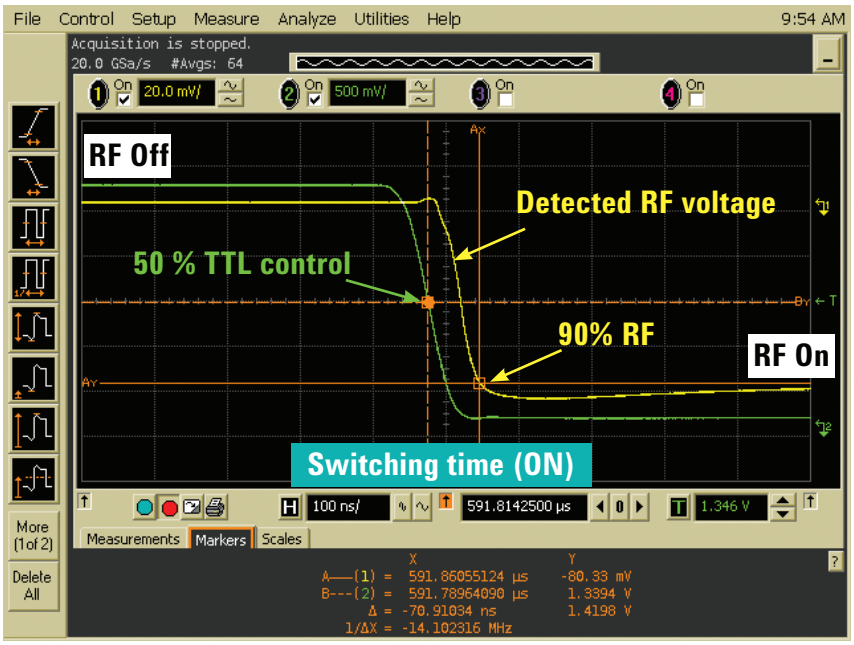


*Figure 12. Typical switching time performance of Keysight P9400C PIN diode and U9400C hybrid FET transfer switches*

*Table 5. Typical switching time performance of solid state switches*

| | PIN diode switches | FET switches | Hybrid switches |
|---|---|---|---|
| Rise time/fall time | Excellent (tens of nanoseconds) | Average | Average |
| Switching time (On/Off) | Excellent (tens to hundreds of nanoseconds) | Average | Average |

## 3.6 Settling time

As discussed in the previous section, switching time specifies an end value of only 90% of the settled/final value the RF signal. As the need for accuracy and precision has increased, settling time performance of a solid state switch, which measures to a level closer to the final value, has become an important specification. The widely used margin-to-final-value of settling time is 0.01 dB (99.77% of the final value) and 0.05 dB (98.86% of the final value).

This specification is commonly used for GaAs FET switches because they have a gate lag effect caused by electrons becoming trapped on the surface of the GaAs. Keysight GaAs FET switches have a patented design that dramatically reduces the gate lag effect on and reduces the settling time to less than 350 microseconds.

There are two common ways to measure the settling time of a FET switch.

### a. Oscilloscope measurement

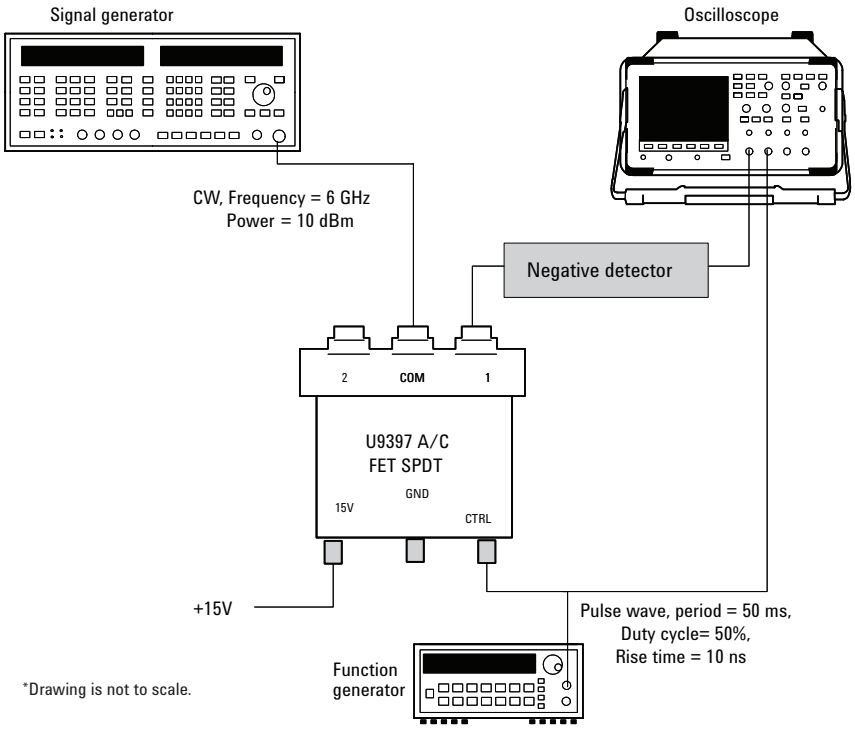


*Figure 13. Measurement setup for measuring settling time using an oscilloscope*

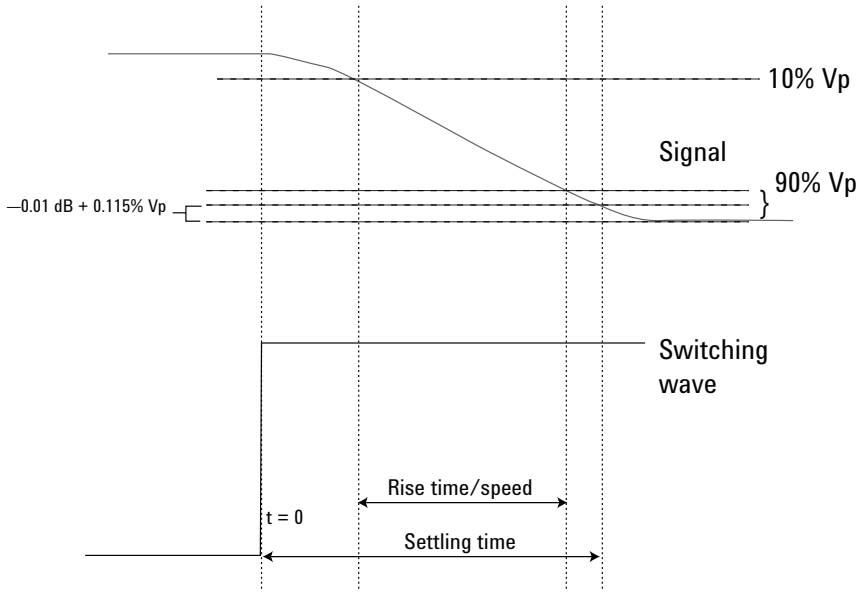


*Figure 14. Switching waveform and settling time diagram*

To translate 0.01 dB to detected voltage in volts (V).

Assume the detected $V_{final}$ = 200 mV
$10 * \log (V_{settled}/V_{final}) = -0.01$
$V_{settled} = 10 (-0.01/10) \times 200$
$V_{settled}$ = 199.54 mV

Note that a value of 10 is used instead of 20 when a square law detector is used because the instrument's output DC voltage is proportional to the RF power delivered to the 50 ohm input.

As a result, you are looking for the point where the detected voltage is 0.46 mV down (99.77% from initial value) from the final voltage. This method of measuring the settling time is less accurate than a network analyzer because the noise of the oscilloscope impairs measurement accuracy.

## b. Network analyzer measurement

Measurement with an oscilloscope always has some uncertainties due to the resolution of the oscilloscope as well as the linearity and response time of the square law detector. A faster and more accurate measurement can be made using a network analyzer with an external trigger output. Figure 15 shows the setup for measuring a Keysight U9397C's settling time using a Keysight PNA-L network analyzer.

Since the settling time measurement is measured to 0.01 dB of the final value, the network analyzer is used to normalize it; this is shown in dB. The two output ports of the network analyzer are connected to switch input and output ports. The trigger signal from the function or pulse generator is used to synchronize the switch control input with the PNA-L's external trigger. Below are the steps used to measure the settling time.

1. Set the network analyzer to continuous wave (CW) and 100 KHz IF BW for a fast sweeping time. When measuring the settling time of the switch, turn on the switch (close) for the path that the network analyzer is measuring. Then wait for a few seconds until it's fully settled and save the S21 data (insertion loss) to the memory.
2. Set the trace to data/mem. Now, a 0 dB trace is seen on the screen.
3. Set the network analyzer to external trigger (or use rising/falling edge depending on which switch port is being measured).
4. When the trigger is set correctly, the transient response will show on the screen. Some averaging may need to be applied to get consistent measurement results.

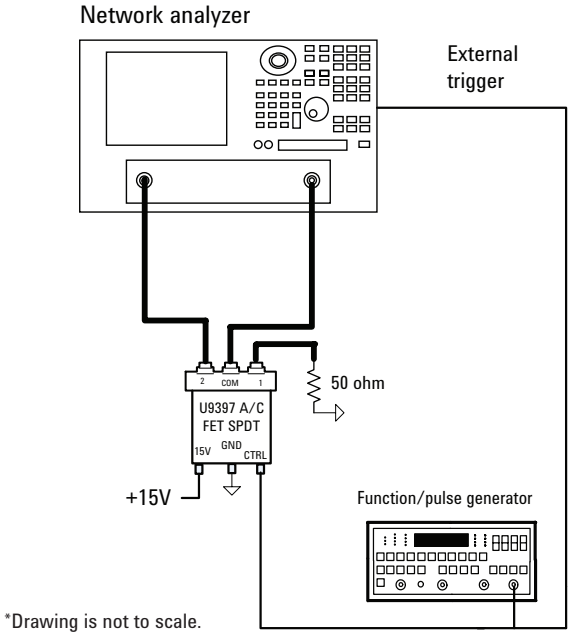


*Drawing is not to scale.

*Figure 15. Measurement setup for measuring settling time using a Keysight PNA-L network analyzer*

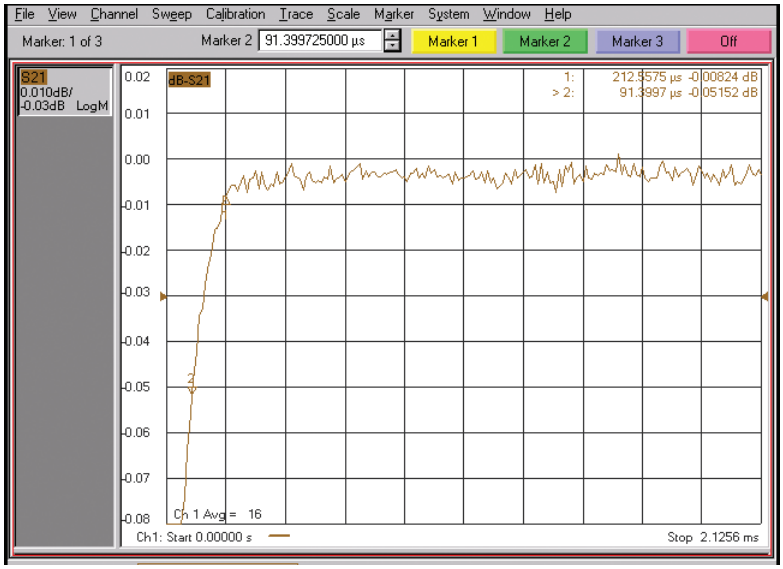


*Figure 16. Typical settling time performance of the U9397A measured using a network analyzer (0.05 dB settling time < 100 µs)*

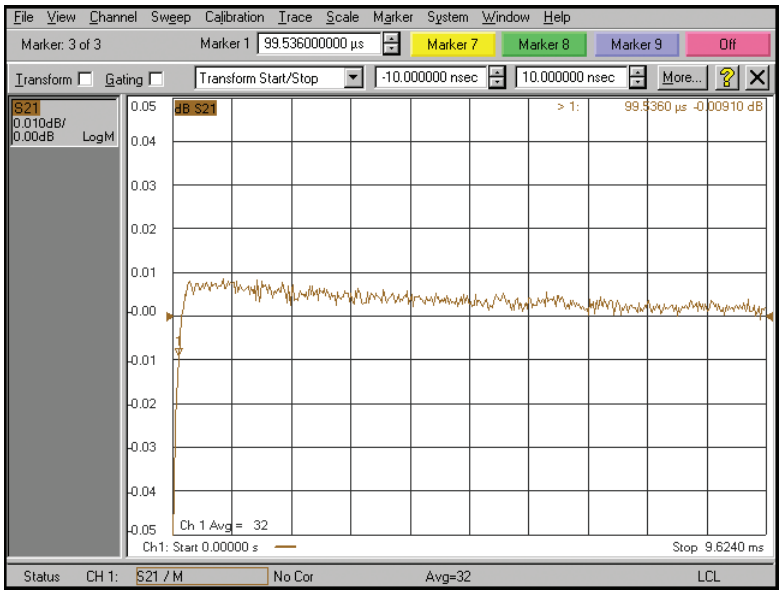


*Figure 17. Typical settling time performance of the U9400A measured using a network analyzer (0.01 dB settling time < 100 µs)*

The U9397A (SPDT FET switch) settling time measurement shows that a 0.05 dB settling time is 91 µs while the 0.01 dB settling time is 212 µs. The U9400C achieves a settling time of 0.01 dB of 100 µs. The superb settling-time performance of Keysight's solid state FET switches is the result of a patented design Keysight Technologies has incorporated into its switches.

*Table 6. Typical settling time performance of Keysight solid state switches*

| | PIN diode switches | FET switches | Hybrid switches |
|---|---|---|---|
| Settling time | Excellent (< 50 µs) | Good (< 350 µs) | Good (< 350 µs) |

## 3.7 Video leakage

The word "video" was adopted from television, where the video signal (the picture) is carried on a VHF or UHF signal. As the name "video" suggests, video leakage or video feed-through signal spectrum is in the MHz to GHz range. [2]

Video leakage refers to the spurious signals present at the RF ports of the switch when it is switched without an RF signal present. These signals arise from the waveforms generated by the switch driver and, in particular, from the leading edge voltage spike required for high speed switching of PIN diodes. When measured using a 50 Ω system, the magnitude of the video leakage can be as high as several volts. The frequency content is concentrated in the band below 200 MHz, although measurable levels can be observed as high as 1 GHz.

Most switches contain video leakage; the magnitude can be as low as a few mV to as high as 3 V in a 50 Ω system. FET or hybrid switches generally offer lower video leakage, a few mV; while PIN diode switches have higher video leakage due to innate design requirements.* In PIN diode switches, the RF and DC biasing share the same path. When control voltage is applied to turn the switch on and off, a current surge will be generated. The DC block capacitor used on the RF path causes the current to surge $I = C\frac{dV}{dt}$ along the RF path when the switch is turned on and off. Some PIN diode switches have video leakage as high as ±10 V. Note that the current surge level depends on how fast the control voltage changes as well as the voltage level and the capacitor's value.

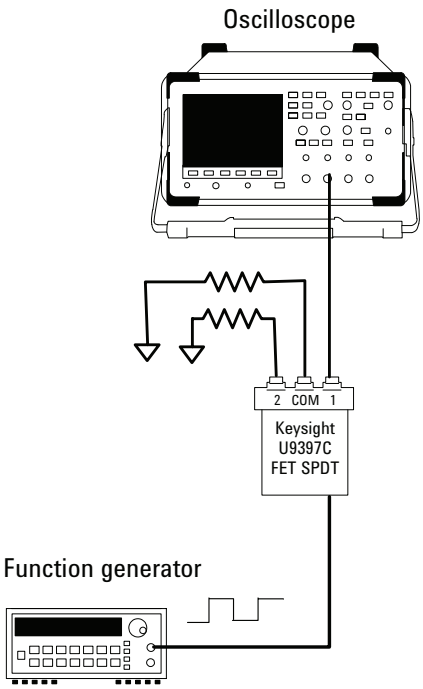


*Figure 18. Video leakage measurement setup*

Video leakage is simply a voltage dividing condition that occurs at 10 MHz or below. If the load's DC input impedance is much higher than 50 ohm, the load will suffer higher video leakage than a load with lower input resistance.

Keysight's solid state switches are carefully designed to ensure extremely low video leakage. For instance, P940x PIN diode switches offer video leakage of 500 mVpp which is extremely low for a PIN diode switch, while U9397 and U9400 FET switches have less than 10 mVpp video leakage.

The amplitude of the video leakage depends on the design of the switch and the switch driver. Video leakage can damage sensitive devices, such as satellite transponders, which use low-power level switching (–100 dBm ON/OFF) and instruments, depending on the amplitude of the video leakage.

* *Refer Keysight Application note "Video Leakage Effects on Devices in Component Test" for a more detailed explanation.*

Figure 18 shows the video leakage measurement setup: an oscilloscope, power supply and function or pulse generator. The switch needs to be biased and all the ports are terminated by a 50-Ohm load except one, which is connected to the oscilloscope's 50-Ohm input channel. The function/pulse generator is connected to the control line of the switch to toggle the switch on and off, the video leakage will be captured on the oscilloscope's screen.

*Table 7. Typical video leakage performance of solid state switches*

| | PIN diode switches | FET switches | Hybrid switches |
|---|---|---|---|
| Video leakage | Average | Excellent | Excellent |

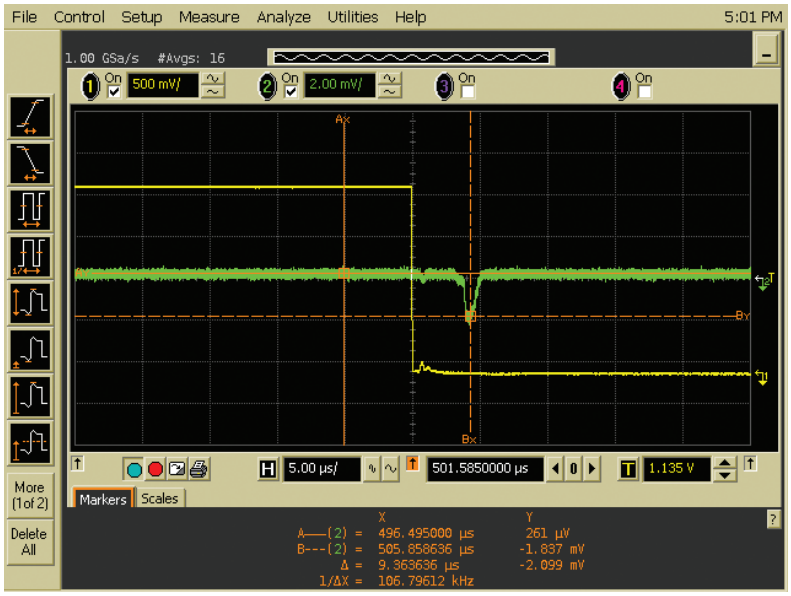


*Figure 19. Typical video leakage performance of the U9400C hybrid FET switch (a negligible 2 mV)*

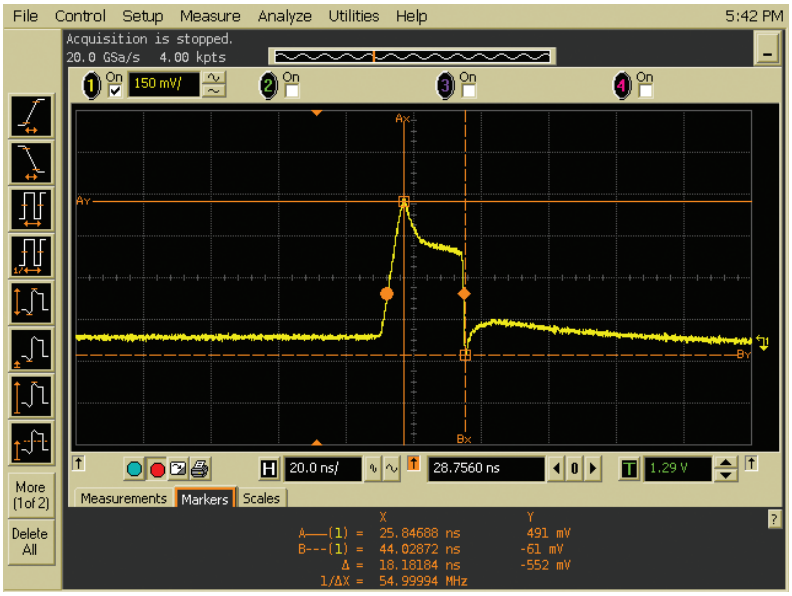


*Figure 20. Typical video leakage performance of the P9400C PIN diode switch (0.5 V—very low for a PIN diode switch)*

## 3.8 Off-port termination

A switch can be reflective or absorptive. With reflective switches, the RF signal at the "off" port is reflected back to the source due to the poor match. In general, these switches have a simpler design, a slightly lower cost, and can handle higher power than absorptive switches. Absorptive switches provide a matched termination at the inactive ports. Because they absorb the RF signal, they are limited by the power-handling capability of the terminations. These switches are slightly more complex in their design.

## 3.9 Phase tracking

Test systems often require switches that are "phase tracked". Phase tracking is the ability of a system with multiple assemblies or a component with multiple paths to closely reproduce their phase relative to each other. A phase tracking requirement is best achieved by first equalizing the time delay between arms of a multi-throw switch. This requires a tightly controlled physical length of the arms from the input port to the output port. Secondly, the difference in phase from one unit to another within a product line should be minimized. Since the switch is made up internally of many elements, i.e. diodes, capacitors, and chokes with their accompanying mounting parasitic reactance and losses, it is necessary to control the uniformity of parts and assembly techniques to achieve the best phase tracking possible.

With tight control on process and lower level material tolerance, Keysight switches feature a phase difference of less than 10 degrees at microwave frequency range up to 18 GHz. Figure 21 shows the phase difference (in degrees) of ports of Keysight's P9404C 18 GHz PIN SP4T switch with one of the ports acting as the reference port. It is obvious that the phase differences of the ports are tightly controlled.

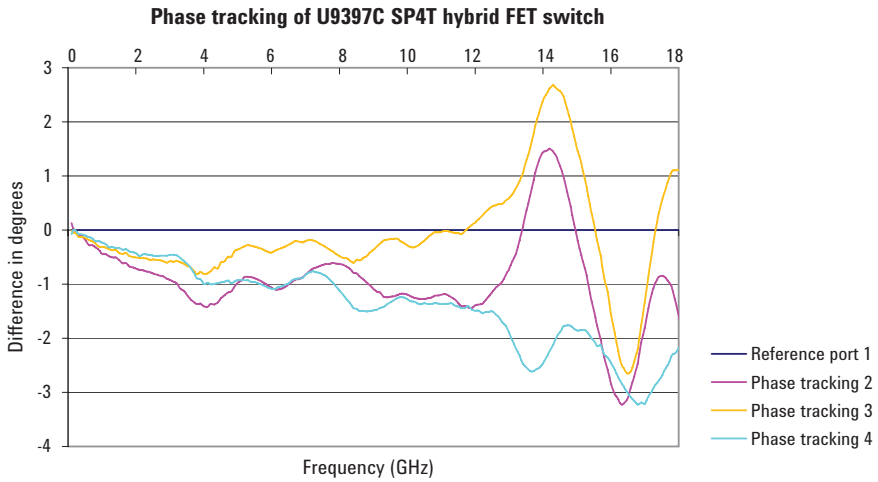


*Figure 21. Typical phase difference (in degrees) performance of Keysight's P9404C 18 GHz PIN SP4T switch*

## 3.10 Harmonic and intermodulation distortion

Harmonic distortion is a single-tone (single-frequency) distortion product caused by device nonlinearity. When a non-linear device (all semiconductors including solid state switches inherently exhibit a degree of non-linearity) is stimulated by a signal at a single frequency $f_1$, spurious output signals can be generated at the harmonic frequencies $2f_1$, $3f_1$, $4f_1$,...$Nf_1$. (Nth harmonic is the Nth order product). Harmonics are usually measured in dBc, dB below the fundamental output signal (see Figure 22).

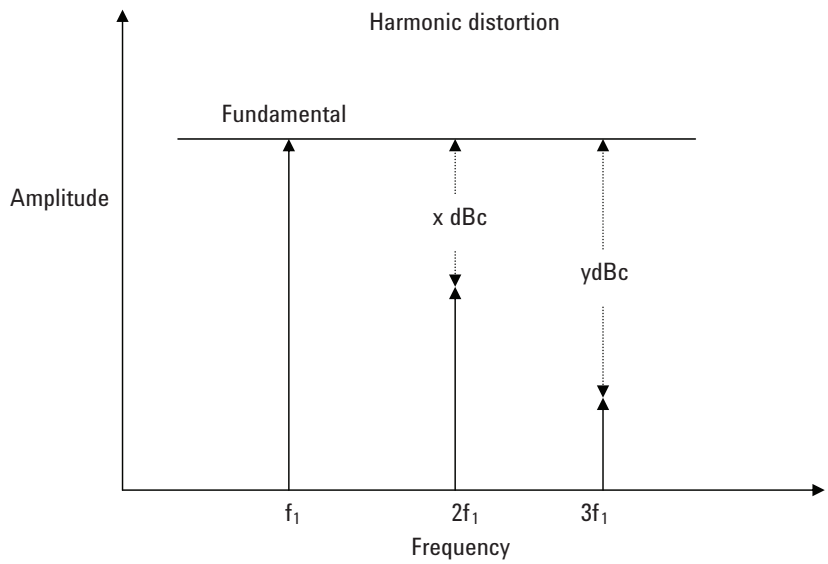


*Figure 22. Harmonics of a fundamental frequency*

Intermodulation distortion arises when the nonlinearity of a device or system with multiple input frequencies causes undesired outputs at other frequencies, causing the signals in one channel to interfere with adjacent channels. Reducing intermodulation distortion has become more important as the spectrum becomes more crammed and channels are more tightly spaced.

These spurious products are mathematically related to the fundamental input signals. It is common practice to limit the analysis to two tones (two fundamental frequencies, $f_1$ and $f_2$, which are normally separated by a small offset frequency of around 1 MHz) due to the complexity analyzing more than two input frequencies at a time. The output frequencies of the two-tone intermodulation products are:

$P f_1 \pm Q f_2$, where P, Q = 0, 1, 2, 3,.....

The order of the distortion product is the sum of P + Q. So, the third order intermodulation products of the two signals, $f_1$ and $f_2$, would be $2f_1 + f_2$, $2f_1 - f_2$, $2f_2 + f_1$ and $2f_2 - f_1$ (see Figure 23).

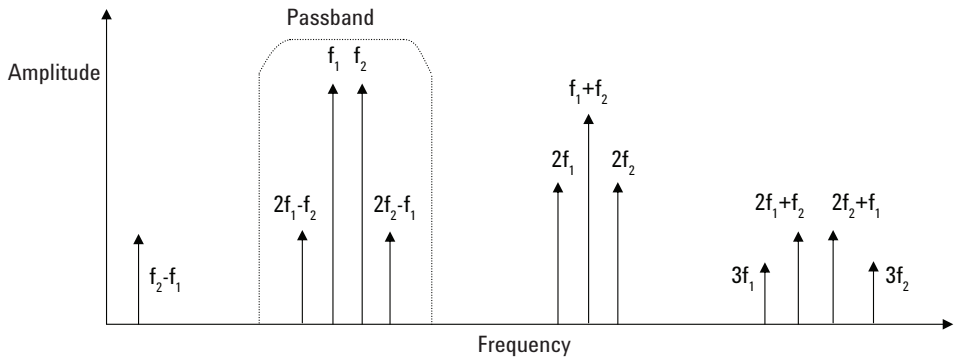


*Figure 23. Second and third order intermodulation distortion*

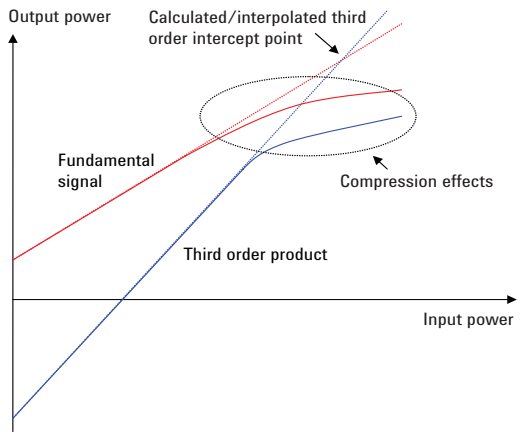


*Figure 24. Realistic representations of third order intercept point*

Broadband systems may be affected by all the non-linear distortion products. However, unlike harmonic and second order distortion products, third order intermodulation distortion products (IP3) are always too close to the fundamental signals to be easily filtered (see Figure 23). When strong signals from more than one transmitter are present at the input of the receiver, as is commonly the case in cellular telephone systems, unwanted distortion products will be generated affecting the receiver measurement.

The nonlinear transfer function of a device or system can be expressed as a series expansion:

$$V_{out} = a_1 A\cos(\omega t) + a_2 A^2 \cos(\omega t) + a_3 A^3 \cos(\omega t)...$$

Higher order intermodulation products will increase in power much faster than the fundamental as shown in Figure 24. The intermodulation signal will increase in power three times faster than the carrier signal. The increase is in dBm units, which are a logarithmic function. The same relationship holds true for other harmonics or intermodulation products. For instance the second harmonic and the second order intermodulation products' power will increase two times (in dBm) faster than the fundamental, while the third harmonics will increase three times as fast.

Keysight solid state switches have mainstream distortion performance. For instance, the U9397A/C SPDT switches have a typical third order intermodulation of 55 dBm (input power) and second harmonic intercept (SHI) and third harmonic intercept (THI) of 70 dBm and 55 dBm respectively.

## 3.11 1 dB compression point

Another nonlinearity of a system or device is measured by the compression point. In the linear region, a 1 dB increase in input power to a device will correspond to 1 dB increase in the output power. The nonlinearity effect becomes apparent when the output power starts to increase less than the input power. When the power difference increment is 1 dB, the device has a 1 dB compression point. If not explicitly stated, the 1 dB compression point refers to the output power ($P_{out}$) at that point.

Keysight U9397A has high 1 dB compression point typically at 29 dBm, while the U9397C is typically at 25 dBm.

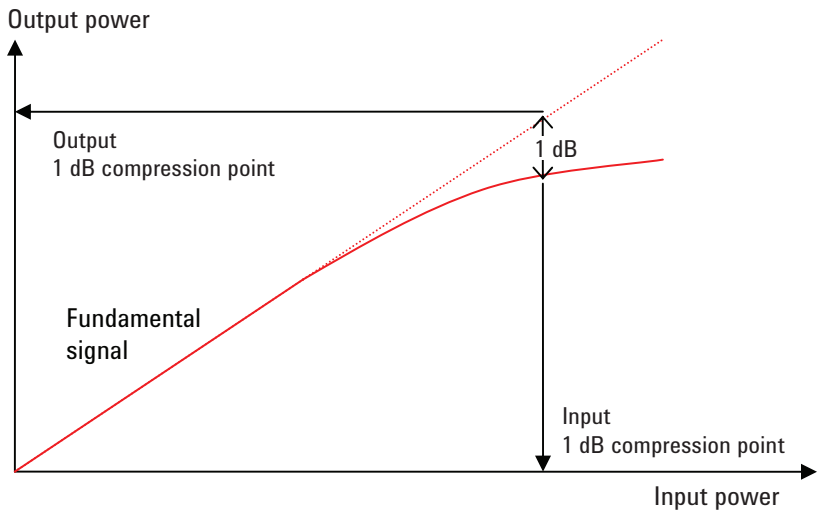


*Figure 25. 1 dB compression point*

# 4.0 Applications

## Application 1
## Mobile handset: power amplifier testing

### Critical parameters: settling time, video leakage

Figure 26 shows a simplified test setup of a dual-band mobile handset power amplifier. A signal generator with digital modulation capability supplies the test signal to the power amplifier and a vector signal analyzer (VSA) is used to measure the output signal from the power amplifier. Two switches are used to switch between the PCS and GSM bands and two attenuators are placed at the output of the power amplifier to protect the switches. The triggering signal (frame trigger) from the signal generator is used to synchronize the VSA and trigger the switches to test the correct band of the power amplifier at the right time. [3]

Switch selection is very important in this application for two reasons: First, the switch must have a settling time that is fast enough to allow the VSA to capture any timeframe of the signal. Figure 6 shows a timing diagram for a GSM/EDGE signal, as you can see one slot equals 577 µs. So, when the signal generator sends a frame trigger signal out, the switches must switch and settle within 577 µs so the VSA can start to capture data within the time frame of the slot 1 signal to ensure accurate measurements.

Keysight U9397A/C incorporates a patented design which reduces the settling time to < 350 µs (measured to 0.01 dB of the final value). Most FET switches available in the market today have a typical settling time of > 50 ms.

The second reason careful switch selection is needed is video leakage. Typical PIN diode switches have video leakage of ≥ 1 Vpp due to the nature of PIN diode switch design. This can potentially damage power amplifiers because their maximum input power is typically < 13 dBm. The other alternative would be electromechanical switches that have low or no video leakage but the switching speed (typically in ms) is too slow for this application.

As discussed in Section 3, "*Solid State Switch Specifications,*" PIN diode switches have higher video leakage than FET or hybrid switches. Nevertheless, careful design of Keysight P9400x PIN diode switches gives them very low video leakage, typically less than 0.6 Vpp, which is excellent for PIN diode switches.

If lower video leakage is needed, both Keysight FET hybrid switches (U9397x and U9400x) offer extremely low video leakage of < 10 mVpp.

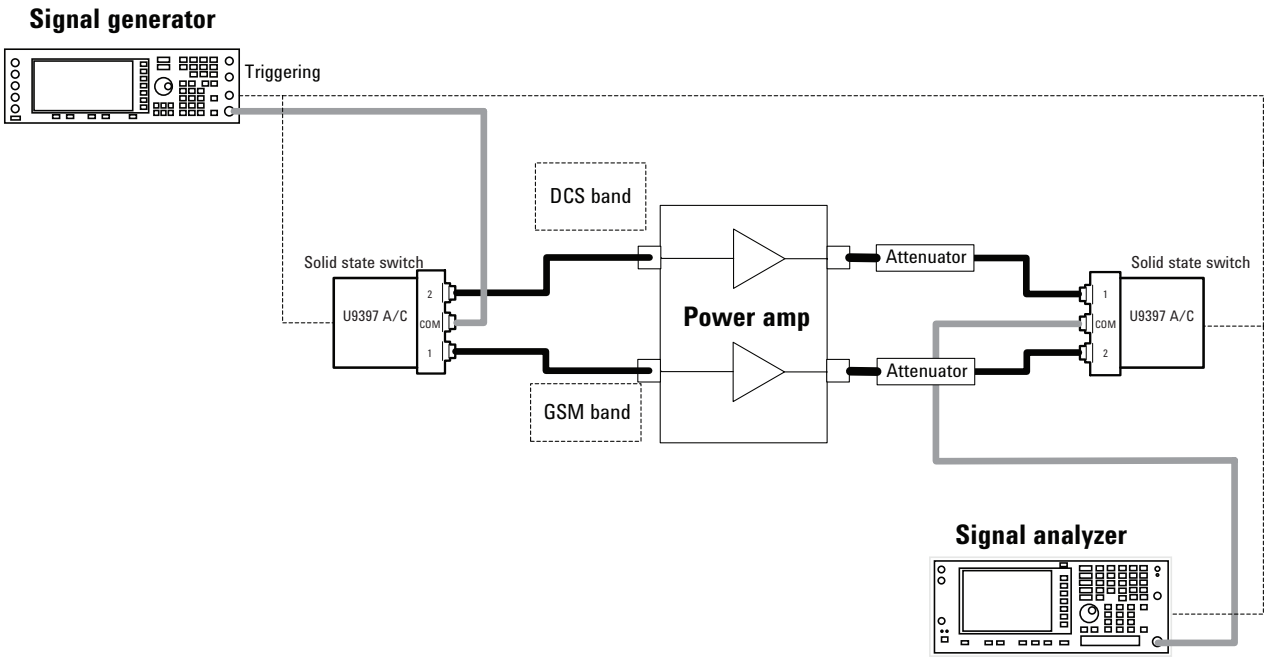


*Figure 26. Simplified test setup for testing GSM/EDGE handset power amplifiers*

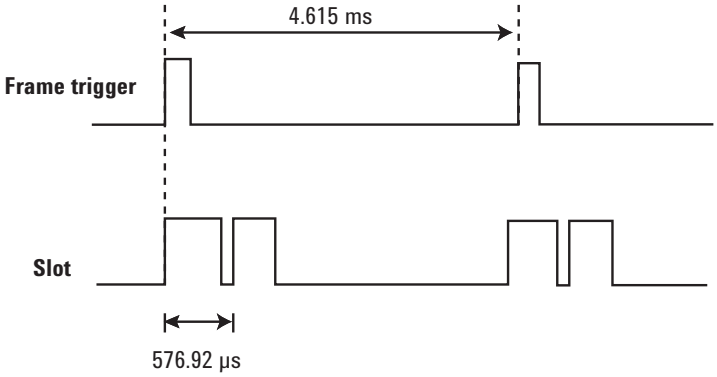


*Figure 27. Timing diagram of a GSM/EDGE signal*

# Application 2
# Signal routing: multiple-instrument, multiple-DUT testing [4]

## Critical parameter: isolation

This section shows how isolation affects measurement accuracy. Figure 28 shows the Keysight P9400C 18 GHz transfer switch configured to test two DUTs simultaneously, each through different sets of equipment targeting distinctive measurement parameters.

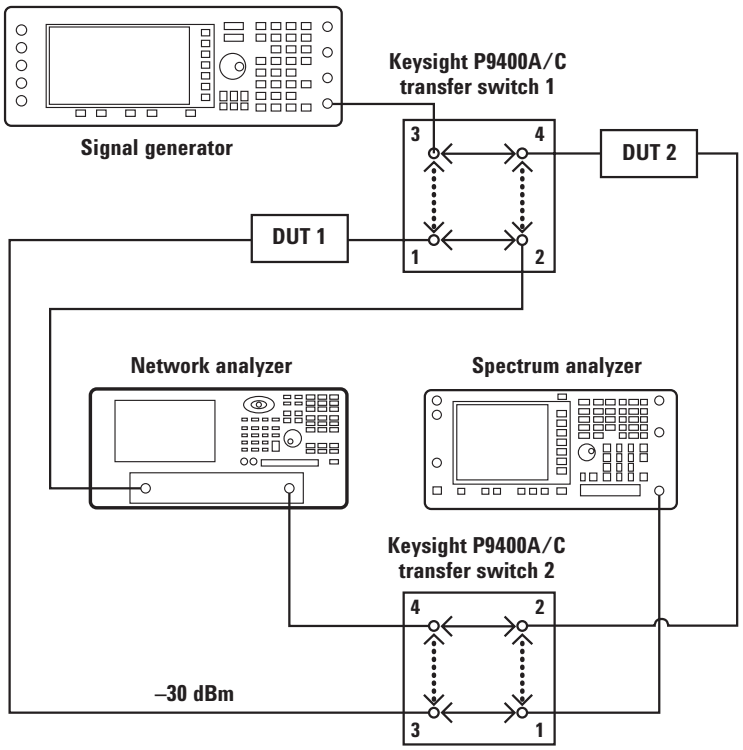


*Figure 28. Switching and testing two DUTs between two different test sets simultaneously*

*Table 8. Switching paths of different test setups*

| Control input | State | DUT 1 connected to | DUT 2 connected to | Tests |
|---|---|---|---|---|
| High | ◄——► | Network analyzer | Network analyzer | S-parameter |
| Low | ◄····► | Spectrum analyzer and signal generator | Spectrum analyzer and signal generator | Spurious signal, harmonics |

DUT 1 is tested for S-parameters using network analyzer, while DUT 2 is tested on harmonics and spurious signals using signal generator and spectrum analyzer.

Keysight U9400C transfer switch's isolation performance is shown in this application example. Assume that the transmitted power coming out of the DUT 1 is –30 dBm. At the same time, DUT 2 is tested on spurious signal, which might be measured to a value as low as –110 dBm or more. This requires switch #2 to have an isolation of more than –110 dBm – (–30 dBm) = –80 dB, which is clearly fulfilled by the isolation performance of U9400C of > 90 dB isolation at 18 GHz.

This is only one of the countless measurement uncertainties that require careful attention. Switches with low or moderate isolation performance can impair system accuracy and time is wasted calculating for the uncertainties and dealing with the complexities that result from the precise timing requirements of ultra fast switching and testing systems.

Isolation is a parameter that is more difficult than insertion loss to calibrate out of a test system, therefore isolation is often seen as the critical parameter of a switch.

*Table 9. Keysight solid state switch isolation performance*

| Model | Type | Isolation specification at 8 GHz (dB) | Isolation specification at 18 GHz (dB) |
|---|---|---|---|
| U9397A/C | Hybrid SPDT | 100 | 90 |
| P9402A/C | PIN diode SPDT | 80 | 80 |
| P9404A/C | PIN diode SP4T | 80 | 80 |
| P9400A/C | PIN diode transfer | 80 | 80 |
| U9400A/C | Hybrid transfer | 100 | 90 |

# Application 3
# Filter bank: SAW filter testing [5]

## Critical parameters: switching speed, settling time, insertion loss, compatible logic

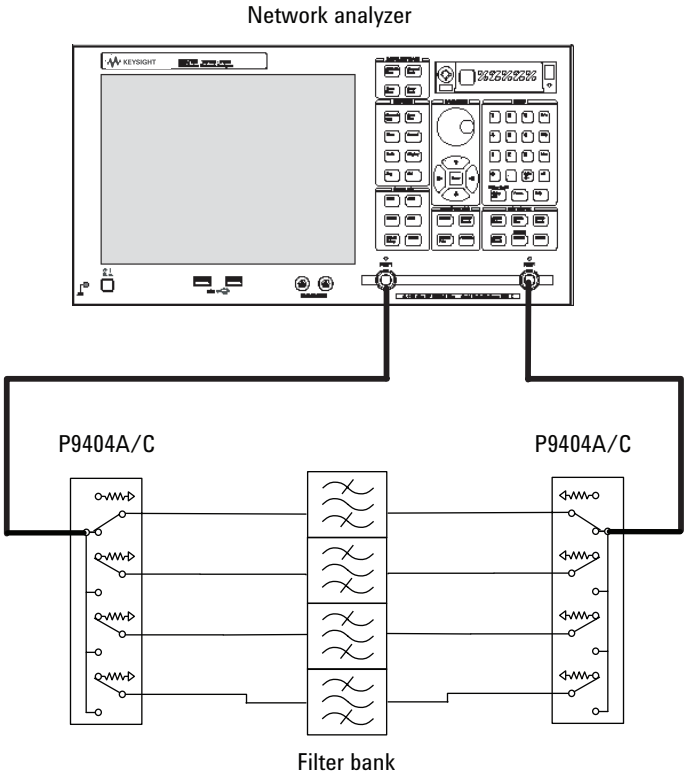


*Figure 29. Typical test setup for filter bank testing*

SAW filters are a high-volume product which could be produced in quantities of two million units per month, so fast switching speed/settling time is needed. With fast switches, test system designers can avoid unnecessary delays between measurements.

Figure 29 shows a typical test setup for filter bank testing. Two SP4T absorptive PIN switches are needed for S-parameter measurements with a Keysight ENA network analyzer. Mobile handset and semiconductor manufacturers use PIN diode switches because fast switching speeds are needed for the high volume testing. P940xA/C PIN diode switches are particularly suitable for this application because they provide very fast switching and rise time, which prevent premature measurements; low insertion loss, which optimizes the dynamic range; and TTL control, which enables easy switch control using +5 V or 0 V.

## Settling time

A typical FET hybrid switch has a settling time of 10 ms compared to Keysight U9397 and U9400 FET hybrid switches which offer a settling time of < 350 µs. If you sweep the network analyzer for an insertion loss measurement and the sweeping time across the screen is 1 ms, it is not difficult to imagine the effect of a switch with moderate or even substandard settling time on the measurement's accuracy.

For example, consider a production line where SAW filters have a typical mean performance of 1 dB insertion loss. The test specification was set at 1.2 dB. The assumption is that the SAW filters' insertion loss performance will fall into a normal distribution with a standard deviation of 0.05 dB. At 4 standard deviations away where the test specification is set, 0.003%* or 30 pieces of SAW filters out of a million will fail the specification in a normal production run.

Now, consider a case where a switch with a long 0.01 dB settling time, 10 ms for instance, is used in the test system. The switch might not settle in time to allow the you to make an accurate measurement on the SAW filters. Assume that at the mid span of the network analyzer's 1 ms-sweep, the switch has just reached 0.1 dB of its final value and you take the measurement at this point of time. This means that an extra loss of 0.1 dB has been unjustly "imposed" on the insertion loss performance of the SAW filter, measuring it as 1.1 dB (mean) instead of 1 dB (mean). The measurement has now shifted to only 2σ away from the test specification, so 2.5%** or 25,000 SAW filters out of a million will fail the specification (of which only 30 pieces are true failures!). What is worse is that this might not be perceived by the manufacturer, leading to unnecessary yield loss.

## Insertion loss

For this insertion loss example, the stopband of the SAW filter is about –70 dB to –80 dB and the network analyzer dynamic range is about 110 dB. In SAW filter manufacturing testing, a comprehensive switch matrix which contains multiple switches in series is commonly used, so the insertion loss measurement might have to go through four or more switches for a measurement.

If each switch has about 4 dB loss and the cable loss is 4 dB, then the total loss of the measurement path will be 20 dB. So, the total insertion loss including the 80 dB stopband-attenuation of the filter itself will be about 100 dB. This is only a 10 dB margin from the dynamic range of the instrument. If each of the switch contributes an extra loss of 1 or 2 dB, you might end up measuring the noise floor of the instrument instead of the actual SAW filter stopband performance.

* *For normal distribution, the probability of exceeding ± 4σ is 0.00006, half of it will be on the right hand side (failing)*

** *For normal distribution, the probability of exceeding ± 2σ is 0.05, half of it will be on the right hand side (failing)*

# Application 4
# Satellite: testing channel amplifiers with ALC systems

## Critical parameter: video leakage

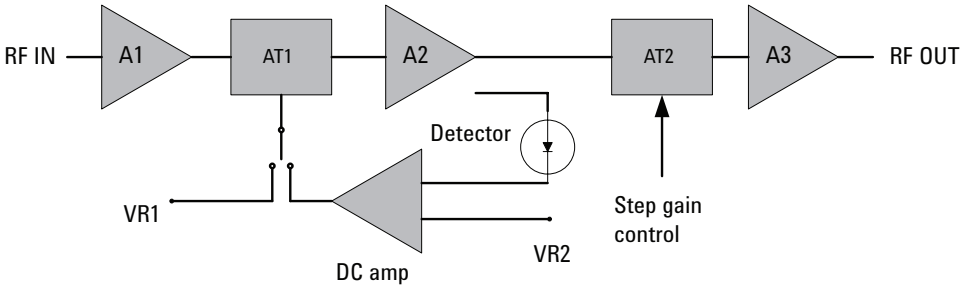


*Figure 30. Channel amplifier with an automatic level control (ALC) system for satellite applications*

Figure 30 shows a typical channel amplifier with an automatic level control (ALC) system for satellite applications. The ALC controls the input of the final power amplifier, for instance a traveling wave tube amplifier (TWTA), that is dependant on the input power level of the channel amplifier. If a PIN diode switch is used to test this device, the video leakage signal could perturb the detector causing the gain of the device under test to alter significantly. This can overstress or damage the TWTA. In this situation, the device could not be installed in a satellite for fear of premature failure.

Both Keysight FET hybrid switches (U9397 and U9400 series) offer extremely low video leakage of < 10 mV, which protects sensitive devices from video leakage damage.

# Application 5
# Base station and satellite: antenna testing

## Critical parameters: switching speed, settling time, isolation, impedance matching

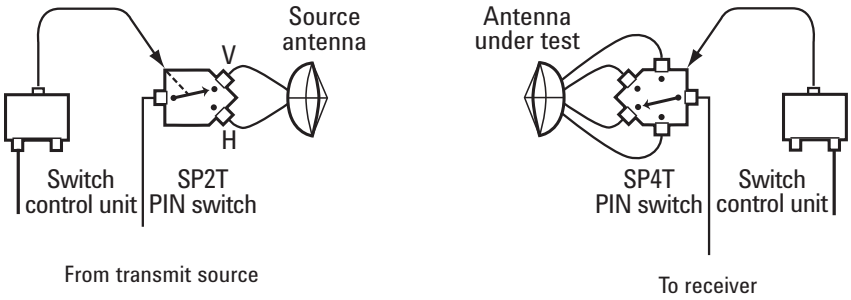


*Figure 31. A typical multiple-channel, multiple-frequency system configuration[6]*

The high cost associated with the manufacture and installation of systems containing antennas, such as base stations and satellites, followed by the subsequent inaccessibility to such systems, makes it imperative that they be designed to provide highly reliable performance throughout their life cycle. As key components of these systems, antennas are extensively tested in many modes of operation to ensure they meet necessary specifications prior to launch.

Input/output beam characteristics are tested as a function of different variables. For instance, amplitude or gain might be measured against frequency, azimuth, elevation, distance, or time. In addition, phased-array antennas have a plurality of sensing and/or receiving elements (feeds), beam forming networks, input/output ports and/or channels which may require many tests. In fact, antenna testing is so extensive that millions of gain measurements alone may be required![7]

Figure 31 shows a typical configuration with Keysight PIN diode switches connected to the source antenna and the antenna under test. Keysight solid state switches provide fast-switching and settling time which makes them ideally suited for testing antennas with multiple channels or ports, as well as for applications requiring both co- and cross-polarization measurements. For instance, one PIN diode switch can switch transmit polarization, while a second switch switches between the separate test ports of the antenna. With this technique, the co- and cross-polarization response of each test port can be measured in one rotation of the antenna. The ability to rapidly switch transmit and receive polarization also enables full polarimetric radar cross-section (RCS) measurements to be made quickly and easily.[8]

In cases where switches with a slow settling time are used, test developers have to idle the test program for a few milliseconds or more before each switching cycle in order to allow the switches to fully settle. Keysight FET switches, with a settling time of 350 µs at 0.01 dB (99.77% of final value); and PIN diode switches, with settling time of typically less than 50 µs; provide fast, reliable switching in antenna test systems.

# 5.0 Conclusion

This application note has delivered a detailed overview on the types and technologies of solid state switches. Important parameters for selecting a solid state switch have been discussed throughout the application note, and comparisons have been made of the different types of solid state switches, namely the PIN diode switch, the FET switch and the hybrid switch.

PIN diode switches have better insertion loss performance at higher frequencies compared to hybrid or FET switches. In contrast, FET and hybrid switches have better insertion loss performance at lower frequencies, around kHz to MHz.

PIN diode switches have excellent rise time and settling time performance, in the nanosecond range compared to FET or hybrid switches. However, Keysight's patented design improves the settling time of its FET switches to < 350 µs.

Hybrid or FET switches, have minimal or negligible video leakage of < 10 mVp, this is much lower than PIN diode switches at around 1 V. Keysight's FET switches has also have excellent isolation performance, up to 100 dBm.

Finally, a number of application examples that illustrate the critical parameters of solid state switches were given, and their significance in today's performance-demanding test and measurement systems were examined. The application examples explained the pros and cons of using different types of switches helping you to understand how switch performance affects the measurement integrity of test systems.

# 6.0 Reference


1. Keysight Technologies, "*Keysight Technologies Solid State Switches Application Note: Selecting the right switch technology for your application*" Literature number 5989-5189EN, 2006

2. Keysight Technologies, "*Keysight Technologies Video Leakage Effects on Devices in Component Test Application Note*" Literature number 5989-6086EN, 2007

3. Keysight Technologies, "*Keysight Technologies U9397A/C FET Solid State Switches (SPDT) Technical Overview*" Literature number 5989-6088EN, 2007

4. Keysight Technologies, "Keysight Technologies P9400A/C Solid State PIN Diode Transfer Switches Technical Overview" Literature number 5989-7215EN, 2007

5. Keysight Technologies, "*Keysight Technologies P940xA/C Solid State PIN Diode Switches*" Literature number 5989-6695EN, 2007

6. Keysight Technologies, "*Keysight Technologies 85331B/85332B Solid State Switches 85331B SP2T 45 MHz to 50 GHz 85332B SP4T 45 MHz to 50 GHz Technical Overview*" Literature Number 5989-4960EN, 2006

7. Theodore S. Fishkin, Lawndale; Mark Skidmore, Long Beach; Peter Dimitrijevie, Redondo Beach, all of Calif., "*Antenna Test and Measurement System*" United States Patent, Nov 28. 1989, Patent Number 4,884,078

8. Keysight Technologies, "*Keysight Technologies Antenna Test Selection Guide*" Literature number 5968-6759E, 2005

myKeysight

www.keysight.com/find/mykeysight
A personalized view into the information most relevant to you.

www.lxistandard.org
LAN eXtensions for Instruments puts the power of Ethernet and the Web inside your test systems. Keysight is a founding member of the LXI consortium.

Three-Year Warranty
www.keysight.com/find/ThreeYearWarranty
Keysight's commitment to superior product quality and lower total cost of ownership. The only test and measurement company with three-year warranty standard on all instruments, worldwide.

Keysight Assurance Plans
www.keysight.com/find/AssurancePlans
Up to five years of protection and no budgetary surprises to ensure your instruments are operating to specification so you can rely on accurate measurements.

www.keysight.com/quality
Keysight Electronic Measurement Group
DEKRA Certified ISO 9001:2008
Quality Management System

Keysight Channel Partners
www.keysight.com/find/channelpartners
Get the best of both worlds: Keysight's measurement expertise and product breadth, combined with channel partner convenience.

www.keysight.com/find/mta

For more information on Keysight Technologies' products, applications or services, please contact your local Keysight office. The complete list is available at:
www.keysight.com/find/contactus

| | |
|---|---|
| **Americas** | |
| Canada | (877) 894 4414 |
| Brazil | 55 11 3351 7010 |
| Mexico | 001 800 254 2440 |
| United States | (800) 829 4444 |
| **Asia Pacific** | |
| Australia | 1 800 629 485 |
| China | 800 810 0189 |
| Hong Kong | 800 938 693 |
| India | 1 800 112 929 |
| Japan | 0120 (421) 345 |
| Korea | 080 769 0800 |
| Malaysia | 1 800 888 848 |
| Singapore | 1 800 375 8100 |
| Taiwan | 0800 047 866 |
| Other AP Countries | (65) 6375 8100 |
| **Europe & Middle East** | |
| Austria | 0800 001122 |
| Belgium | 0800 58580 |
| Finland | 0800 523252 |
| France | 0805 980333 |
| Germany | 0800 6270999 |
| Ireland | 1800 832700 |
| Israel | 1 809 343051 |
| Italy | 800 599100 |
| Luxembourg | +32 800 58580 |
| Netherlands | 0800 0233200 |
| Russia | 8800 5009286 |
| Spain | 0800 000154 |
| Sweden | 0200 882255 |
| Switzerland | 0800 805353 |
| | Opt. 1 (DE) |
| | Opt. 2 (FR) |
| | Opt. 3 (IT) |
| United Kingdom | 0800 0260637 |

For other unlisted countries:
www.keysight.com/find/contactus
(BP-06-16-14)

This information is subject to change without notice.
© Keysight Technologies 2008, 2010, 2014
Published in USA, July 31, 2014
5989-7618EN
www.keysight.com