Sequential Shunt Regulation

Regulating Satellite Bus Voltages

Application Note

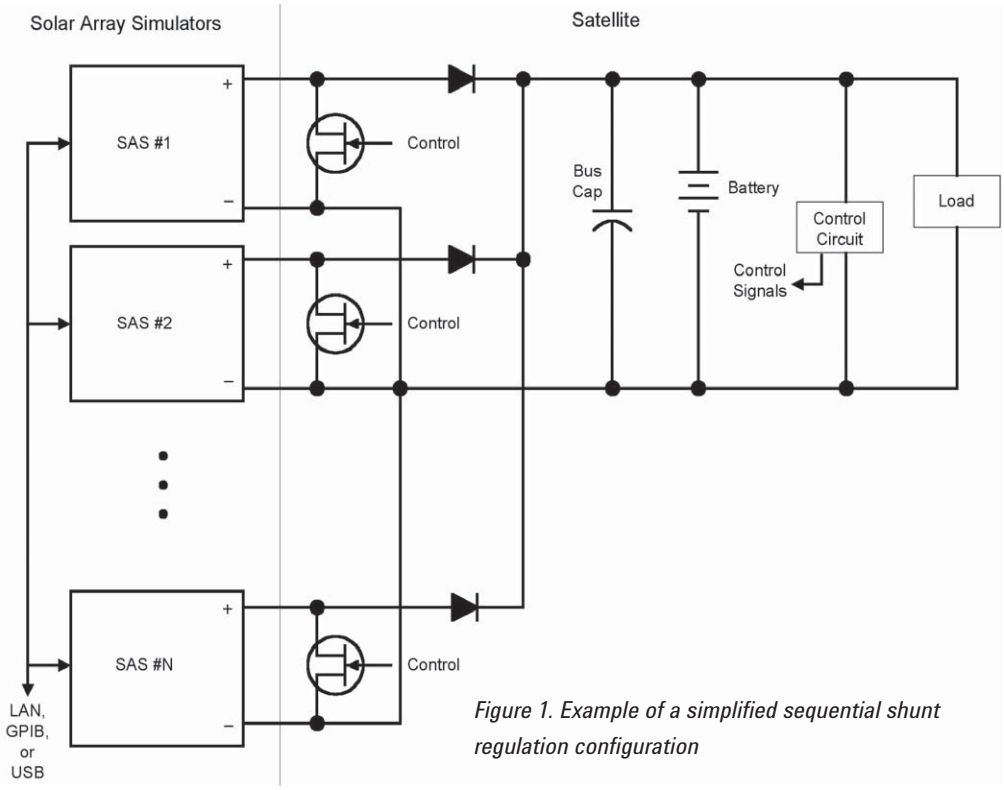

Figure 1. Example of a simplified sequential shunt regulation configuration

Sequential shunt regulation is widely used for regulating satellite bus voltages. A simplified sequential shunt configuration is shown in Figure 1.

The Agilent Technologies E436xA modular solar array simulator (SAS) is ideal for this type of application. Operating in this configuration, the SAS output current either flows into the load or into the shunt control FETs. The shunt control FET will be referred to as "the shunt" or "the switch" for the remainder of this paper. Figure 2 shows a typical solar array I-V curve. As an example, let's assume operation at the maximum power point. When the shunt is open, the current to the load will be I_{mp} (current at the maximum power point). When the shunt is closed, the current in the shunt is I_{sc} (short circuit current). Figure 3 shows the output waveforms from one SAS. The output current of the SAS is basically constant because the difference between I_{mp} and I_{sc} is usually small; however, the voltage changes from near zero with a short (switch on) to V_{mp} (switch off).

Agilent Technologies

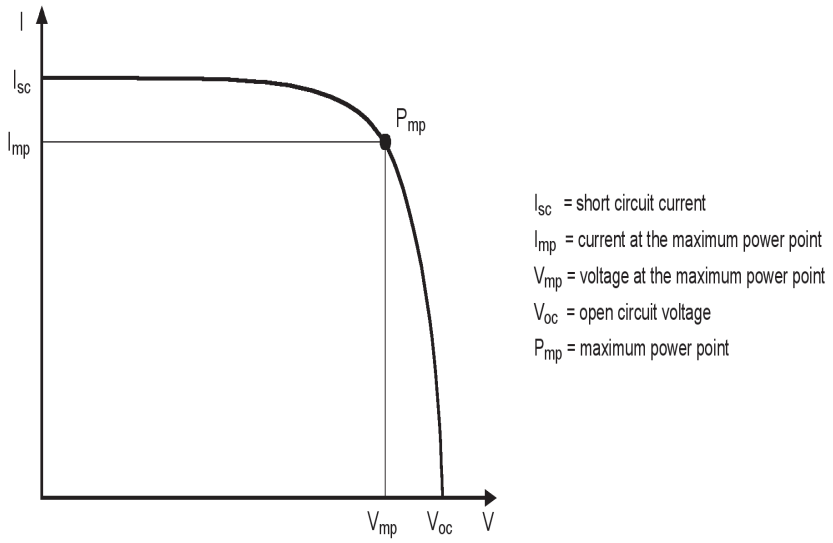

Figure 2. Typical solar array output characteristic I-V curve

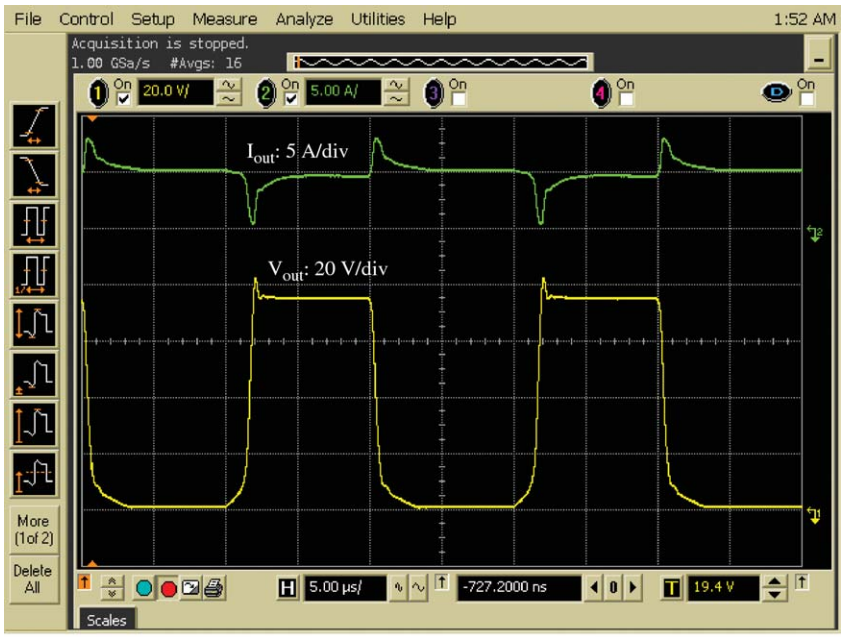

Figure 3. Agilent E4362A SAS output voltage and current waveforms (shunt switching at 50 kHz)

If the bus voltage = V_{mp}, then the output power delivered to the bus = (1-D) (N) (P_{mp}) where: D = "on" duty cycle of the shunt FET, N = number of SAS supplies, P_{mp} = maximum power point. To satisfy the power demands of the power system of the satellite, the output voltage of the SAS has to rise within about 1 to 10 µs when the shunt is opened and the operating point changes from the short circuit point to the operating load point on the curve. The E436xA's low output capacitance (<50 nF) allows this fast rise time and also limits the turn on switching losses in the shunt switch. The E436xA can handle switching frequencies up to 50 kHz. Figure 3 shows the output voltage and current of the E4362A when the shunt switches at 50 kHz with shunt FET rise and fall times of about 1 µs. For this test, the E4362A is in SAS mode (refer to data sheet) and the I-V curve is defined by these four parameters: I_{sc} = 5.00 A, I_{mp} = 4.75 A, V_{mp} = 120 V and V_{oc} = 130 V. The load is about 42 ohms. (Note that with these settings and the duty cycle used, the operating point is not the maximum power point.) The wire inductance between the SAS output and the shunt switch is very low. As the inductance increases, the voltage overshoot on the output voltage will increase, but will be limited by fast acting internal clamp circuits. The overshoot and undershoot in the current (Figure 3) are due to the internal output snubber, as part of the output capacitance, charging and discharging. Note that in Figure 1, the bus capacitor across the battery is required to smooth the bus voltage and current, lowering the ripple.

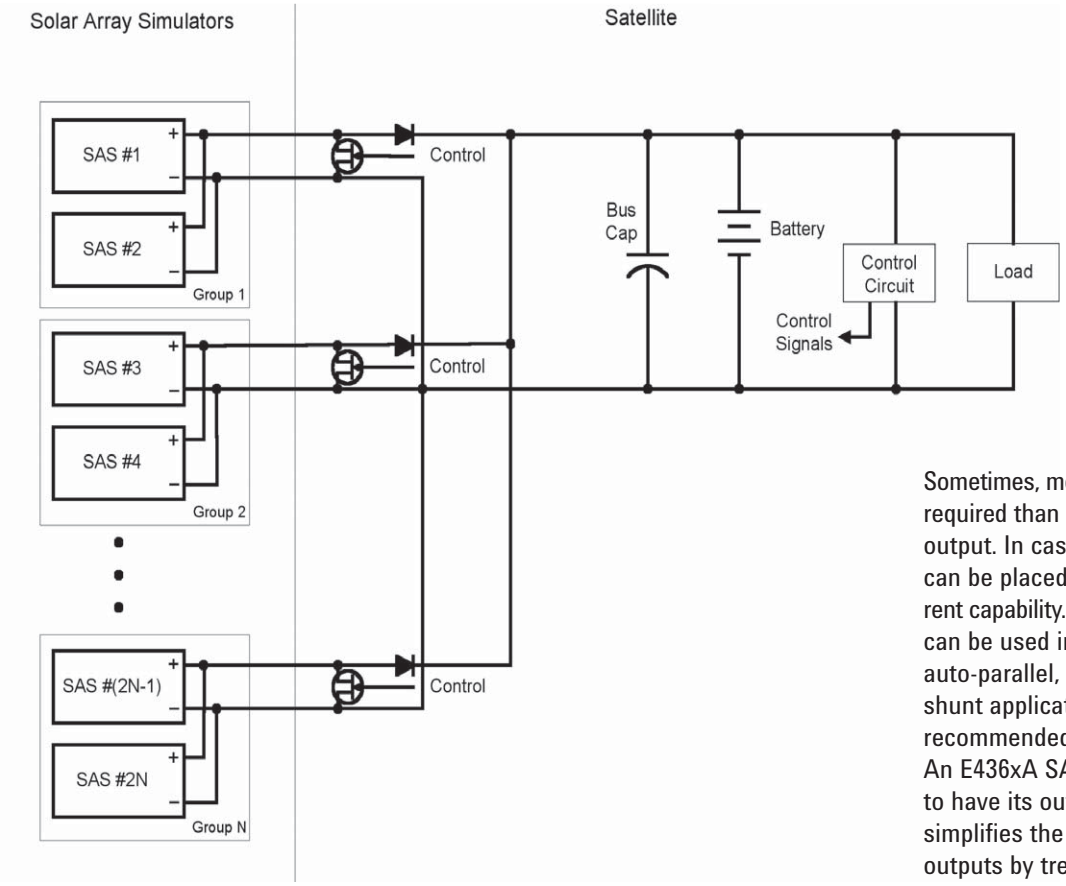

Figure 4. Simplified sequential shunt regulation configuration with parallel SAS outputs for more current

Figure 1 shows diodes in series with each output of the SAS (after the shunt). These diodes isolate the supplies so that when one shunt is on, the bus voltage and other SAS outputs are not pulled low. The diodes should have very fast recovery time (or they should be Schottky diodes); otherwise the power dissipation in the diode and the shunt FET will be high. Higher levels of noise will also occur if slow diodes are used, or if the FET rise and fall times are too fast. The latter can be controlled by adjusting the FET gate resistor. A snubber (RC) across the diodes may help reduce the switching noise and voltage overshoots. A heatsink may be needed to keep the FET or diode cool and within its temperature ratings.

Voltage and current ratings of the shunt switch are determined by the V_{oc} and I_{sc} parameters. The heatsink design for the switch will depend on the switching frequency, the duty cycle, and the output current. Higher switching frequency and higher duty cycle ("on" time) will increase the power dissipation in the shunt FET.

Sometimes, more current (and power) is required than is available from a single output. In cases like this, SAS outputs can be placed in parallel for more current capability. The E436xA SAS outputs can be used in either direct-parallel or auto-parallel, however, for sequential shunt applications, direct-parallel is recommended as shown in Figure 4. An E436xA SAS can be configured to have its outputs "grouped" which simplifies the programming of the outputs by treating the two outputs as one output from a programming perspective. Programming commands will then need to be sent to only a single output instead of having to send commands to each of the paralleled outputs individually.

When using a sequential shunt configuration, the number of strings is determined by the total power required. When using the E436xA, strings may be added or subtracted as necessary for the particular application. Each string is programmable over LAN, GPIB, or USB using SCPI (Standard Commands for Programmable Instruments). The E436xA also comes with the Agilent 14360A System Control Tools software which is used to simplify the control of a large number of solar array simulator outputs in a system of E4360A SAS's.

www.agilent.com

Agilent Email Updates

www.agilent.com/find/emailupdates
Get the latest information on the products and applications you select.

Agilent Direct

www.agilent.com/find/agilentdirect
Quickly choose and use your test equipment solutions with confidence.

Agilent Open

www.agilent.com/find/open
Agilent Open simplifies the process of connecting and programming test systems to help engineers design, validate and manufacture electronic products. Agilent offers open connectivity for a broad range of system-ready instruments, open industry software, PC-standard I/O and global support, which are combined to more easily integrate test system development.

LXI

www.lxistandard.org
LXI is the LAN-based successor to GPIB, providing faster, more efficient connectivity. Agilent is a founding member of the LXI consortium.

Remove all doubt

Our repair and calibration services will get your equipment back to you, performing like new, when promised. You will get full value out of your Agilent equipment throughout its lifetime. Your equipment will be serviced by Agilent-trained technicians using the latest factory calibration procedures, automated repair diagnostics and genuine parts. You will always have the utmost confidence in your measurements. For information regarding self maintenance of this product, please contact your Agilent office.

Agilent offers a wide range of additional expert test and measurement services for your equipment, including initial start-up assistance, onsite education and training, as well as design, system integration, and project management.

For more information on repair and calibration services, go to:

www.agilent.com/find/removealldoubt

Product specifications and descriptions in this document subject to change without notice.

For more information on Agilent Technologies' products, applications or services, please contact your local Agilent office. The complete list is available at:

www.agilent.com/find/contactus

Americas

Canada	(877) 894-4414
Latin America	305 269 7500
United States	(800) 829-4444

Asia Pacific

Australia	1 800 629 485
China	800 810 0189
Hong Kong	800 938 693
India	1 800 112 929
Japan	0120 (421) 345
Korea	080 769 0800
Malaysia	1 800 888 848
Singapore	1 800 375 8100
Taiwan	0800 047 866
Thailand	1 800 226 008

Europe & Middle East

Austria	01 36027 71571
Belgium	32 (0) 2 404 93 40
Denmark	45 70 13 15 15
Finland	358 (0) 10 855 2100
France	0825 010 700*
	*0.125 €/minute
Germany	07031 464 6333**
	**0.14 €/minute
Ireland	1890 924 204
Israel	972-3-9288-504/544
Italy	39 02 92 60 8484
Netherlands	31 (0) 20 547 2111
Spain	34 (91) 631 3300
Sweden	0200-88 22 55
Switzerland	0800 80 53 53
United Kingdom	44 (0) 118 9276201

Other European Countries:
www.agilent.com/find/contactus

Revised: October 1, 2008

© Agilent Technologies, Inc. 2008

Printed in USA, October 8, 2008
5989-9791EN

Agilent Technologies