# Over the Air A-GPS Testing

## Keysight Technologies and ETS-Lindgren

## Meet the Requirements for CTIA Certification with A-GPS OTA Testing

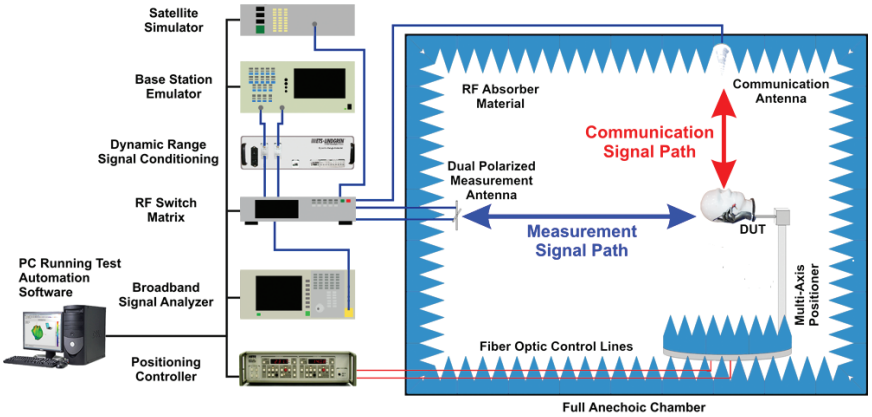


The CTIA certification of mobile devices requires Over the Air (OTA) performance testing of Assisted GPS (A-GPS). In order to ensure compliance you need to test your products to the A-GPS OTA CTIA certification standard.

ETS-Lindgren's integrated antenna measurement solution extends the company's AMS-8000 series to allow you to test your products to meet the requirements of CTIA certification. The company's test systems are currently in use by over 80% of CTIA Authorized Test Laboratories (CATL's) worldwide.

The AMS-8000 series of antenna measurement systems include a fully anechoic radio frequency (RF) test chamber equipped with device under test (DUT) positioning equipment, antennas, instrumentation, and test automation software. ETS-Lindgren's EMQuest™ EMQ-100 Antenna Measurement Software supports A-GPS and other Receive Signal Strength (RSS) based measurement methods.

- A-GPS Over the Air Testing for CTIA certification of mobile devices
- Compliant with CTIA certification standards
- Extends capabilities of AMS-8000 series antenna measurement systems
- AMS-8000 used by over 80% of CATL's
- Integrates with Keysight 8960 wireless communications test set
- A-GPS testing supported by EMQuest Antenna Measurement Software
- Upgrade path for existing customers

KEYSIGHT TECHNOLOGIES

## Over the Air A-GPS Testing

The system can be integrated with wireless communication test instrumentation including the 8960 wireless communications test set and E4438C vector signal generator from Keysight Technologies.

ETS-Lindgren's antenna measurement systems provide A-GPS OTA testing across the entire product cycle: design verification, performance validation, pre-certification testing, and final certification testing. Customers with existing AMS-8000 systems can upgrade to A-GPS test capability by adding options to their EMQuest EMQ-100 software.

The AMS-800 Series integrated with Keysight instrumentation provides the OTA antenna measurement capabilities you need to be confident of achieving CTIA certification for your mobile devices.

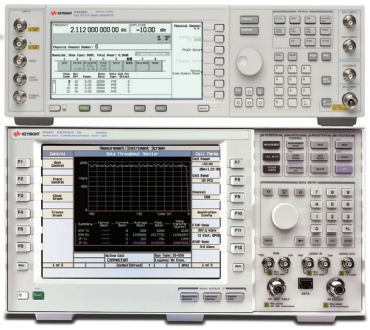

Keysight GS-9000 Lite A-GPS bench top design verification test solution.

**System Components**

Keysight Technologies

| | |
|---|---|
| E5515C | 8960 Series 10 wireless communications test set |
| E4438C | ESG Vector signal generator |
| E4438C-005 | 6 GB internal hard drive |
| E4438C-409 | Global positioning system (GPS) personality |
| E4438C-601 or -602 | Internal baseband generator |

Other options are available; contact your local Keysight sales engineer for more details

ETS-Lindgren

| |
|---|
| RF shielded chamber and related components (absorber, doors, filters, lighting, etc.) |
| Baseline configuration: 700 MHz to 6 GHz – options available to extend frequency range |
| Positioning equipment, measurement antennas and software (EMQuest™) |
| Design, installation, integration and training |
| Performance testing |

To learn how this solution can address your specific needs please contact Keysight's solutions partner, ETS-Lindgren
www.keysight.com/find/ets-l

Enabling Your Success™
ETS-LINDGREN
An ESCO Technologies Company

Keysight & Solutions Partners
Extending our solutions to meet your needs

Keysight and its Solutions Partners work together to help customers meet their unique challenges, in design, manufacturing, installation or support. To learn more about the program, our partners and solutions go to
www.keysight.com/find/solutionspartner

For more information on ETS-Lindgren products, applications or services, please go to
www.ets-lindgren.com/wireless

For information on Keysight Technologies' products, applications and services, go to
www.keysight.com

© Keysight Technologies, 2011-2014
Published in USA, August 1, 2014
5990-4655EN

KEYSIGHT TECHNOLOGIES