Product Fact Sheet

# Keysight E1834E, E1834G, E1834J, E1834M, E1834Z Mounted Beam Delivery Optics

The Keysight Technologies, Inc. E1834x is a series of beam delivery optics in high performance mounts that offer the high pointing stability required for transducer systems. They can be used for routing the laser beam throughout the laser interferometer system and are available in a variety of splitting percentages and mounting configurations.

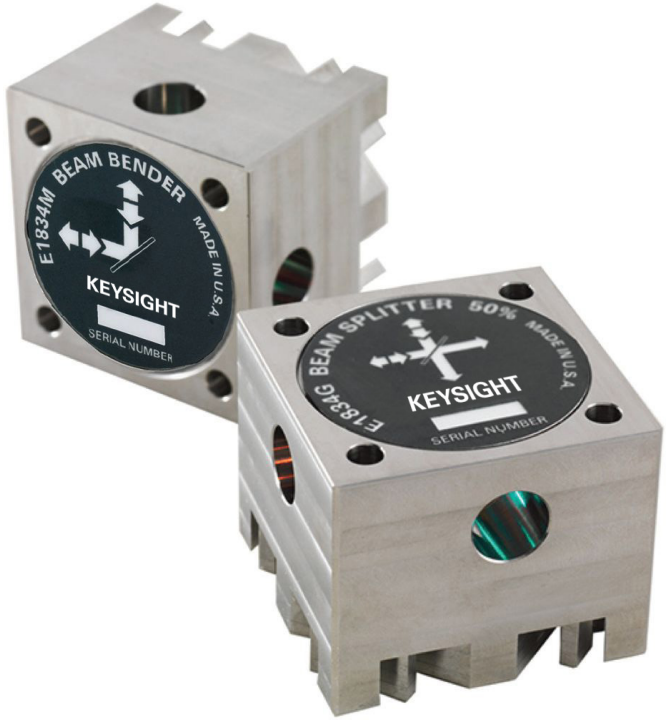


Keysight E1834E/G/J/M/Z Mounted Beam Delivery Optics.

## Key features

- 4 beam splitting percentages and 2 mounting configurations
- 8 flexure feet designed for 6 °C range
- 416 stainless steel housing for low CTE
- 11 mm clear aperture for up to 9 mm diameter laser beam
- Excellent reflected beam pointing accuracy relative to machined datums

KEYSIGHT TECHNOLOGIES

## Product specifications

| Model | Splitter reflective % | Optical efficiency | Mount configuration |
|---|---|---|---|
| E1834E | 33% | ± 5% | Horizontal |
| E1834G | 50% | ± 5% | Horizontal |
| E1834J | 67% | ± 5% | Horizontal |
| E1834M | 100% | ± 5% | Horizontal |
| E1834Z | 100% | ± 5% | Vertical |

- Reflected beam pointing accuracy
  - Pitch: ≤ 2.0 mradians
  - Yaw: ≤ 1.5 mradians
- Beam height: 31.5 mm
- L x W x H: 55 mm x 55 mm x 45 mm

## Horizontal mount beam pattern

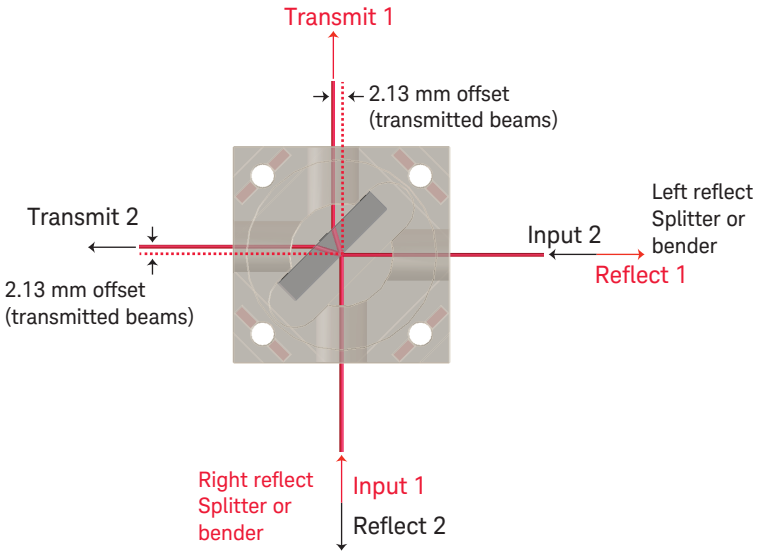


## Vertical mount beam pattern

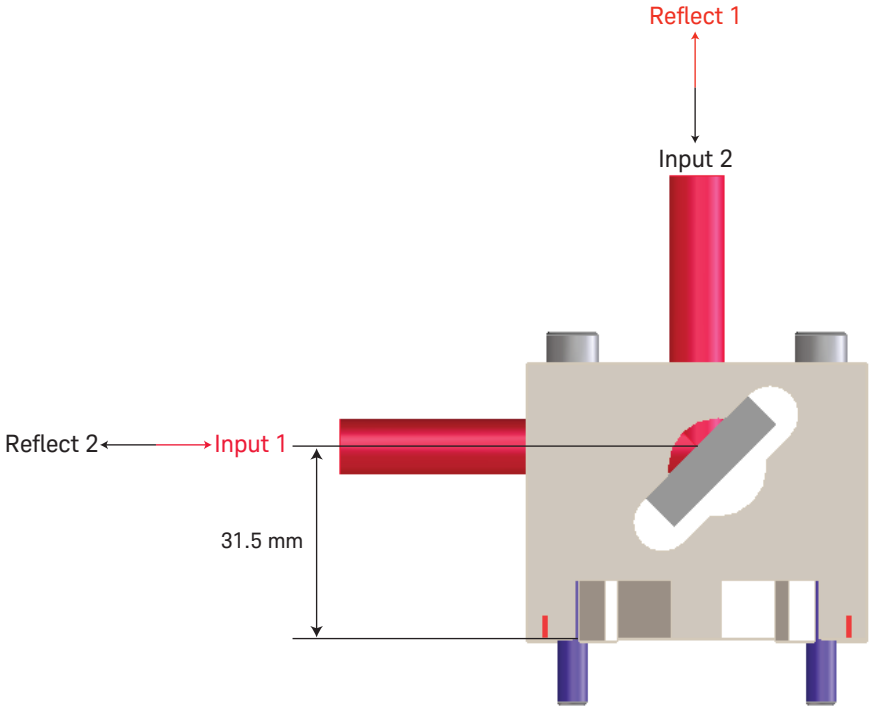


For more details on Keysight interferometry systems, components and ordering information please visit www.keysight.com/find/lasers

Three-Year Warranty
www.keysight.com/find/ThreeYearWarranty
Keysight's commitment to superior product quality and lower total cost of ownership. The only test and measurement company with three-year warranty standard on all instruments, worldwide.

Keysight Assurance Plans
www.keysight.com/find/AssurancePlans
Up to five years of protection and no budgetary surprises to ensure your instruments are operating to specification so you can rely on accurate measurements.

KEYSIGHT TECHNOLOGIES

This information is subject to change without notice.
© Keysight Technologies, 2011 – 2014
Published in USA, August 1, 2014
5990-5055EN
www.keysight.com