# Keysight Technologies
# E8782A Pin Matrix and E8783A Pin Matrix Card

## Data Sheet

The Keysight Technologies, Inc. E8782A pin matrix with instrumentation and E8783A pin matrix card are new additions that double the number of supported channels offered by the previous E8792A and E8793A matrix cards. With this increase in supported channels, customers can now support tests on units with a higher number of pin counts using the E6198A switch/load unit.

Effectively, the E8782A pin matrix with instrumentation is configured with 24 instrument channels and 40 measurement channels and retains the features included with the older E8792A card.

The E8783A pin matrix card doubles the number of channels on the E8793A card and retains all features, including the switched auxiliary I/O channels for each row. These auxiliary channels are commonly used for digital I/O operations or other user-defined applications.

Both the E8782A and E8783A are compatible for use with existing E8792A and E8793A cards. Their architecture retains the same analog bus design which allows customers to easily cascade several cards in the E6198A switch/load unit.

### E8782A and E8783A conceptual overview

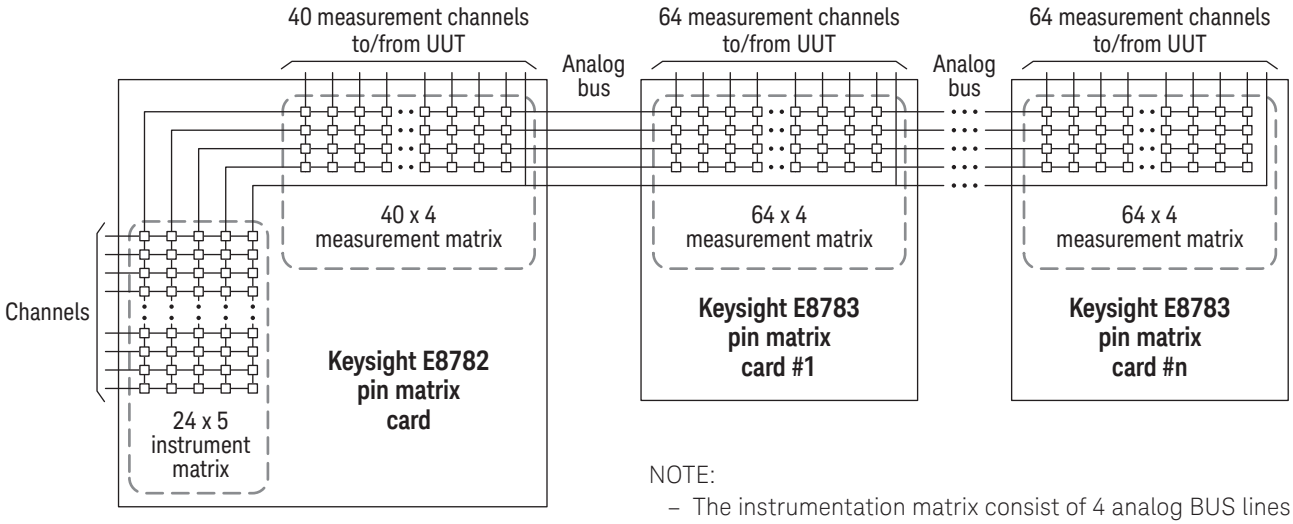


NOTE:
- The instrumentation matrix consist of 4 analog BUS lines and a 5th UUT common line, hence 24 x 5
- The auxiliary channels are not shown in this conceptual overview
- Cascading of cards to E8792A and E8793A are similar, using the analog bus

KEYSIGHT TECHNOLOGIES

## E8782A and E8783A specifications

| General specifications | | |
|---|---|---|
| **Parameter** | **Specification** | |
| Power requirement | Voltage: +5 Vdc | |
| Capacitance – DUT pin to UUT common | Open channel: 100 pF<br>Closed channel: 300 pF | |
| Channels | E8782A | E8783A |
| | 40 measurement<br>24 instrument | 64 measurement |
| Resistance | DUT pin to auxiliary input: 1 ohm (maximum)<br>DUT pin to analog bus connector: 1 ohm* (maximum)<br>* with 100 ohm protection resistor bypassed | |
| Pin channel voltage | 200 volts | |
| Number of concurrent analog channels | 4 | |
| Operating temperature | 0 to 40 °C | |
| Operating humidity | 80% relative humidity, 0 to 40 °C | |
| Maximum current consumption | 3 A at 5 V | |

| Relay characteristics | |
|---|---|
| **Parameter** | **Specification** |
| Type | Dry reed |
| Switching speed | Close: 500 µs<br>Open: 400 µs |
| Switching characteristics | 1.0 A carry<br>0.5 A while switching<br>7.5 volt-amps maximum instantaneous switching |
| Other relay parameters | 300 VDC standoff voltage<br>200 VDC switching voltage |

myKeysight

myKeysight

www.keysight.com/find/mykeysight
A personalized view into the information most relevant to you.

Keysight Channel Partners
www.keysight.com/find/channelpartners
Get the best of both worlds: Keysight's measurement expertise and product breadth, combined with channel partner convenience.

www.keysight.com/find/automotive
www.keysight.com/find/gptest

For more information on Keysight Technologies' products, applications or services, please contact your local Keysight office. The complete list is available at:
www.keysight.com/find/contactus


Americas

| | |
|---|---|
| Canada | (877) 894 4414 |
| Brazil | 55 11 3351 7010 |
| Mexico | 001 800 254 2440 |
| United States | (800) 829 4444 |

Asia Pacific

| | |
|---|---|
| Australia | 1 800 629 485 |
| China | 800 810 0189 |
| Hong Kong | 800 938 693 |
| India | 1 800 11 2626 |
| Japan | 0120 (421) 345 |
| Korea | 080 769 0800 |
| Malaysia | 1 800 888 848 |
| Singapore | 1 800 375 8100 |
| Taiwan | 0800 047 866 |
| Other AP Countries | (65) 6375 8100 |

Europe & Middle East

| | |
|---|---|
| Austria | 0800 001122 |
| Belgium | 0800 58580 |
| Finland | 0800 523252 |
| France | 0805 980333 |
| Germany | 0800 6270999 |
| Ireland | 1800 832700 |
| Israel | 1 809 343051 |
| Italy | 800 599100 |
| Luxembourg | +32 800 58580 |
| Netherlands | 0800 0233200 |
| Russia | 8800 5009286 |
| Spain | 800 000154 |
| Sweden | 0200 882255 |
| Switzerland | 0800 805353 |
| | Opt. 1 (DE) |
| | Opt. 2 (FR) |
| | Opt. 3 (IT) |
| United Kingdom | 0800 0260637 |

For other unlisted countries:
www.keysight.com/find/contactus
(BP-04-23-15)


KEYSIGHT TECHNOLOGIES


This information is subject to change without notice.
© Keysight Technologies, 2010 - 2015


Published in USA, June 4, 2015
5990-5256EN
www.keysight.com