Keysight Technologies
Switching Solutions
for research and development, design validation, manufacturing

Application Note

Abstract

This paper discusses the Keysight Technologies, Inc. complete line of switching solutions and helps you to make the right decision for your test application, whether you design your own or have Keysight create a solution for you. Switching components are introduced in detail, followed by the various scale of switch matrix that is required in RF and microwave testing. R and D engineers, test and design validation engineers as well as manufacturing engineers will find suitable switching solutions from Keysight.

KEYSIGHT TECHNOLOGIES

Table of Contents

Abstract ..... cover
Switches: Components and Technologies 3
Type of microwave switches 3
Advantages and disadvantages of SS and EM switches 6
Key features of solid state switches versus electromechanical switches 7
Manufacturing and wear debris 8
Operating life of an EM switch 8
Switch repeatability 13
Effect of repeatability on measurement uncertainty 13
Switch selection 14
Considerations when Designing a Switch Matrix 18
Use of terminations 18
Handling high power 18
Signal conditioning 19
Matching phase levels on differential lines 19
Semi-rigid vs. flexible cable 20
Thermal considerations 20
Easy access for maintenance 20
Spares for quick repairs 20
Position indicators 21
Switching Platforms/Control Methods (11713B, 34980A, L4490/1A) 21
Small scale, lower cost 22
Bench top switching solution 22
System based switching solution 22
Selecting the right platform for your needs 24
Switch Matrices: the Make vs. Buy Dilemma 29
Make 29
Buy 30
Conclusion 30
Contact Keysight ..... Back cover

Switches: Components and Technologies

Introduction

Not a single switch can best fit all applications. Selecting the correct switch technology (in terms of RF performance, reliability, switching time, power handling, etc.) to accessorize and/or complement your system setup requires an investment of time and resources. The relative advantages and disadvantages of different types of switches determine their use for specific applications. Although among switches of the same basic type there is a variety of switching speeds, frequency ranges, functions, capabilities, operating life and power handling available. In this section, the various types of microwave switches that are generally available will be briefly explained, a common indication of their performance capabilities will be presented, and basic information that will assist you in selecting the most appropriate switch type for a given application.

RF and microwave switches are used extensively in microwave systems for signal routing between instruments and devices under test (DUT). Incorporating a switch into a switch matrix system enables you to route signals from multiple instruments to single or multiple DUTs. This makes it possible for multiple tests to be performed with the same setup, eliminating the need for frequent connect and disconnects. The entire testing process can then be automated to increase throughput in a high volume production environment.

Types of microwave switches

Before selecting a switch, it is important to understand the fundamental differences between switches. The two mainstream switch technologies in use today, electromechanical (EM) and solid state (SS), will be discussed.

There are two major types of connectorized RF and microwave switch modules:

a) EM switches rely on mechanical moving contacts as their switching mechanism.

b) There are two types of SS switches; field-effect transistors (FETs) and PIN diodes. FET switches create a channel (depletion layer) that allows the current to flow from the drain to the source of the FET. The PIN diode consists of a high resistivity intrinsic (I) layer sandwiched between highly doped positively (P) charged material and negatively (N) charged material.

The primary focus here will be on the theory of operation, coupled with a detailed explanation on typical performance.

These two mainstream switch technologies can be further categorized in several ways: by frequency range, transmission line Interface (waveguide/coax/stripline), operating life, power handling capability, etc. Of these basic technologies, the EM switch was the first to be commercially available and still represents over half of the dollars spent on the microwave switching function.

Electromechanical switch

Keysight's EM switches are under the moving contact or stripline coaxial switch category. They are small, lightweight, and available in configurations ranging from SPDT to SP6T; including the matrix switch, transfer switch, and bypass switch configurations. Actuation is usually accomplished by small linear solenoids, one solenoid being provided for each output position. Transition from the coaxial input and output transmission lines to a well matched stripline contact assembly, operating in a switch cavity that has the characteristics of a waveguide beyond cutoff, occurs at the connectors.

With innovative design and tight tolerance of machining processes, coaxial switches with stripline contact assemblies can provide acceptable performance up to 50 GHz and as high as 67 GHz. Excellent values of isolation can be obtained within the practical limits of switch cavity cross section and length, with values often exceeding 100 dB. These values of isolation prove to be in conformance with the theoretical values, and exhibit virtually complete absence of resonant frequency or any of the various forms of leakage which tend to degrade the performance of the switch. Switching times of 20 milliseconds or less are practical. VSWR ratings below 1.5:1 up to a frequency of 18 GHz are common, with values below 1.3:1 possible. Insertion loss approaches the theoretical minimums at the lower frequencies, and almost never exceeds 0.5 dB, except at the millimeter-wave frequency ranges. Power handling ability is modest, normally in the range of watts to hundreds of watts. More details about power handling of switches will be discussed in another section.

Solid state switch

Solid state switches such as FETs and PIN diodes have long been used for switching applications. A brief overview of their characteristics will be helpful in understanding how switches operate.

FET switch

The FET switch is rapidly making progress with respect to increased bandwidth and faster switching speeds. The FET technology offers the potential for very high quality switches, with relatively low loss, high switching speed, and respectable power handling capability in a very small package. FETs provide excellent isolation at low frequencies. FET switches are very stable and repeatable due to good control of the drain-to-source resistance (R_{DS}). However, the isolation of FET degrades at higher frequencies due to the drain-to-source capacitance (C_{DS}). Figure 1 shows a GaAs MESFET schematic, with Equation 1 showing the drain-to-source impedance equal to 320 Ω at 10 GHz. This is equivalent to an isolation of 10.5 dB between the drain and the source. Therefore, FET switches are not ideal at high frequencies.

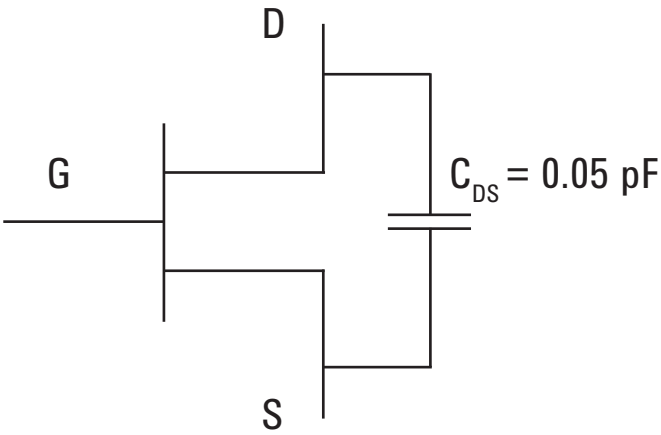

Figure 1. GaAs MESFET Schematics and Equation

$$C_{DS} = 0.05\ \text{pF}, f = 10\ \text{GHz}$$

$$|X_C| = \left|\frac{1}{jwC}\right| = \left|\frac{1}{j2\pi fC}\right| = 320\ \Omega$$

Equation 1.

PIN diode switch

PIN diodes are another mainstream switching technology. The PIN diode switch is one of the many solid-state control devices to evolve from the discovery that junction diodes could control the flow of power in RF transmission lines. First introduced commercially in the late 1950's, PIN diode switches are capable of extremely fast switching speeds, and are available in very small packages. Switching speeds can be as fast as one nanosecond (transition time), and power handling capability ranges from the low milliwatt level through as much as 10 kW average power at the low microwave frequencies. In general, the performance limitations of PIN diode switches are set by the characteristics of the semiconductors used.

The most important feature of the PIN diode is its basic property as an almost pure resistor at RF and microwave frequencies. Its resistance value varies from 10 KΩ to less than 1Ω depending on the amount of current flowing through it. Two key PIN diode characteristics are:

- The lowest operating frequency of a PIN diode is given by Equation 2. The PIN diode will behave like a P-N diode if it operates below this frequency. The RF signal will be rectified by the diode.

  $f = 1/(2\pi\tau)$

  Equation 2.

  where τ equals the minority carrier life time

- The PIN diode impedance (forward bias) at RF and microwave frequencies depends primarily on DC forward bias, not on the RF or microwave signal.

Hybrid switch

Neither PIN diodes nor FETs provide distinctive advantages in bandwidth and isolation requirements at the same time. Therefore, hybrid switches using FET and PIN diode technology were created to provide wide bandwidth and high RF performance switching.

The operation theory of hybrid switches is summarized below. Hybrid switches use:

- Series FETs to extend the frequency response down to DC (series FETs provide excellent low frequency isolation).
- Shunt PIN diodes at λ/4 spacing to provide good isolation performance at the high-end frequencies.

The utilization of series FETs instead of PIN diodes also provides better repeatability performance because the R_{DS} ON is well controlled.

Advantages and disadvantages of SS and EM switches

Solid state switches are reliable and exhibit longer lifetimes than their electromechanical counterparts due to their superior resistance to shock, vibration, and mechanical wear. They also offer faster switching times. However, solid state switches have higher insertion loss than electromechanical switches due to their higher innate ON resistance. Therefore solid state switches are preferred in systems where fast switching and long lifetime are essential. Solid state switches are often used in switch matrix systems for testing of semiconductor devices where high switching speed is critical and power handling requirements are lower.

Compared to solid state switches, electromechanical switches have higher power handling, lower insertion loss, higher Isolation, and lower VSWR. In addition, solid state switches are non-linear so they generate harmonic distortion and intermodulation distortion. For these reasons, electromechanical switches are used much more widely in switch matrices than solid state switches. However, the down side of electromechanical switches is their lower operating life, slower switching speed and settling time.

Key features of solid state switches versus electromechanical switches

Table 1. Shows the key performance comparison of electromechanical versus solid state switches.

Electromechanical and solid state switch performance comparison (typical)				
Switch type	Electro-mechanical	Solid state		
		(FET)	(PIN)	(Hybrid)
Frequency range	from DC	from DC	from MHz	from kHz
Insertion loss	low	high	medium	high
Isolation	good across all frequencies	good at low-end frequencies	good at high-end frequencies	good at high-end frequencies
Return loss	good	good	good	good
Repeatability	good	excellent	good	good
Switching speed	slow	fast	fast	fast
Power handling	high	low	low	low
Operating life	medium	high	high	high
ESD immunity	high	low	medium	low
Sensitive to	vibration	RF power overstess, temperature	RF power overstess, temperature	RF power overstess, temperature

Table 2. Shows the performance comparison of Keysight electromechanical and solid state switches. The key parameters and typical performances will be discussed in the following sections.

Electromechanical and solid state switch performance comparison (typical)			
Switch type	Electro-mechanical N1810TL	Solid state (hybrid) U9397C	Solid state (PIN) 85331B
Frequency range	DC – 26.5 GHz	300kHz – 18 GHz	45 MHz – 50 GHz
Insertion loss	< 0.6 dB	< 0.6 dB	< 15.5 dB
Isolation	120 dB at 26.5 GHz	100 dB at 8 GHz	100 dB at 0.5 GHz
Switching speed	10 – 50 ms	< 350 µs	< 1 µs
Power handling	30 W at 4 GHz (cold switching)	0.8 W at 8 GHz	0.5 W
Operating life	> 5 million cycles	infinite	infinite

Manufacturing and wear debris

Debris or particles inside the switch cavity may lead to premature failure if the debris material is allowed to migrate to the contact surface. Such material between the contacts can cause an open circuit, and likely induce variation in insertion loss. Debris inside the switch cavity can come from two possible sources, namely the contamination during manufacturing and material wear and tear. Manufacturing debris is minimized by thorough part cleaning using the Crest Cleaning process. Minimizing wear debris requires the selection of both appropriate switch topology as well as suitable material for switch construction. Wear debris is generated when two surfaces come in contact between the fixed contact (connector) and moving contact (switch blade). The amount of debris generated is dependent upon the surface area of the sliding contact, the amount of frictional force on them, and the contact material's tendency to shed.

Operating life of an EM switch

The operating life of an EM switch can be defined as the number of cycles the switch will complete while meeting all RF and repeatability specifications. The operating life refers to the electrical life of the switch, and not the mechanical life (which is much longer than the electrical life). One life cycle is defined as one closing and opening of the moving contact (sometimes referred to as switch blade) or one on/off triggering of the electromagnetic coils in the switch. The operating life is very dependent on the moving contact mechanism, contact resistance, and the material and plating used in all the key RF components of a switch. Keysight coaxial EM switches are produced with meticulous manufacturing processes and stringent quality assurance systems.

Conventional EM switch contact mechanism

Conventional switches function by moving a thick rectangular contact known as a moving contact (or switch blade) inside the switch cavity. The moving contact is joined by a push rod, generally made of a dielectric material such as polystyrene (PS) that moves inside an access hole in the switch cavity. The tip of the moving contact directly touches the flat surface on the tip of the center conductors of the connectors by a mechanical spring force from the actuator.

Figure 2 depicts an open RF line with the moving contact retracted. Figure 3 depicts a closed RF line where the moving contact forms a bridge between input and the output port allowing the RF signal to propagate from common port to outer port.

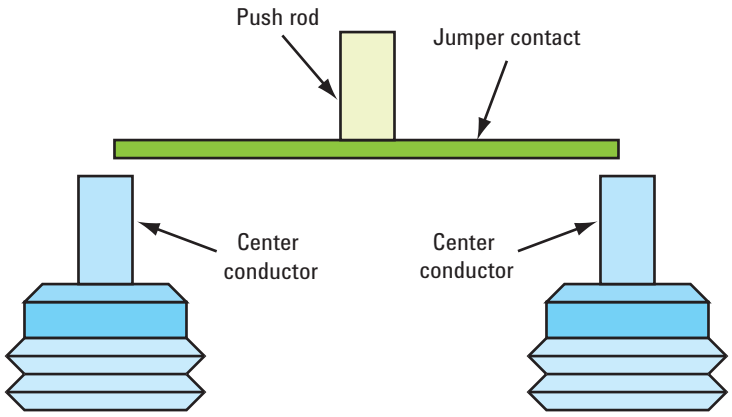

Figure 2. RF line open

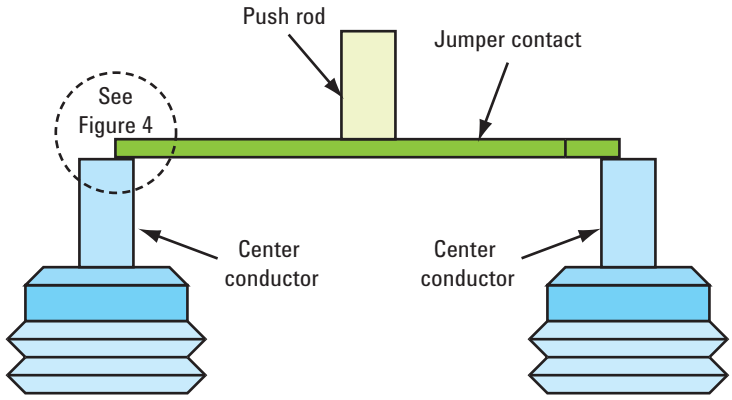

Figure 3. RF line closed

The moving contact is usually thick and inflexible, as can be seen in Figure 4. The vertical motion of the moving contact and push rod during opening and closing results in what is sometimes referred to as “frictionless switching”, since there is no friction produced between the moving contact and center conductor.

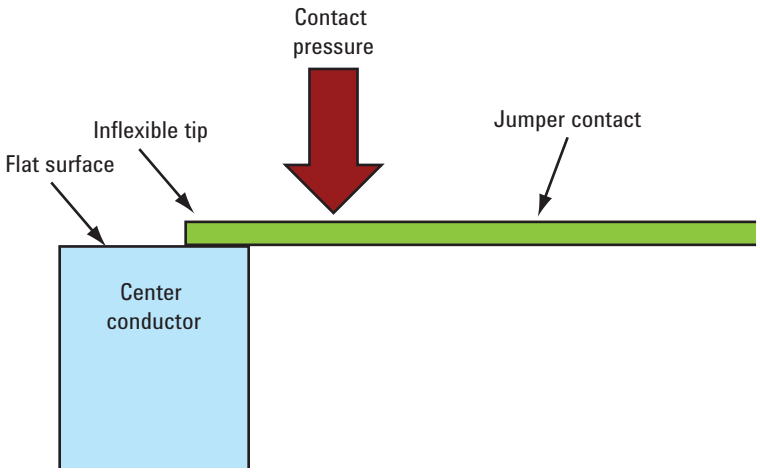

Figure 4. Conventional electromechanical switch mating configuration

This configuration produces switches that can mechanically actuate for tens of millions of cycles. However, there are some drawbacks. The continuous impact between the moving contact and center conductor will gradually result in increasing wear and tear, producing some debris. The debris, along with dirt and contamination accumulated over time remains on the tip as can be seen in Figure 5.

As a result, contact resistance increases over time leading to increased insertion loss. This may or may not result in the switch failing its RF specifications, but will have a significant effect on the insertion loss repeatability of the switch. The random nature of this particle buildup also means that such failure can be intermittent, and may not be detectable. This buildup is the result of an inflexible moving contact. The particles remain trapped on the surface of the center conductor throughout the life of the switch. Switches designed this way usually have loose repeatability specifications or none at all, with possible failures occurring intermittently throughout the lifetime of the switch.

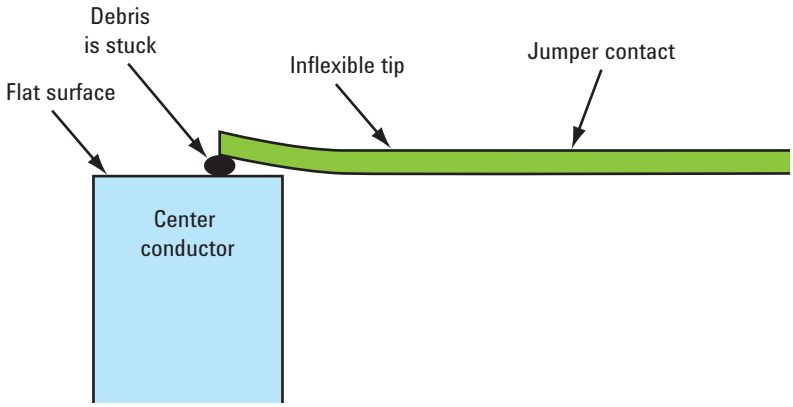

Figure 5. Particle buildup remains trapped between the jumper contact and center conductor

Keysight's EM switch contact mechanism

Keysight's RF electromechanical switches are designed to operate well beyond their specified lifetime within all RF specifications with an insertion loss repeatability of less than 0.03 dB up to 40 GHz.

To achieve this repeatability specification, it is necessary to have a design that "cleans off" the center conductor tip every cycle, eliminating particle buildup that is prevalent in conventional EM switch design. This is made possible in Keysight switches with a unique "wiping action" mechanism, which is illustrated in Figure 6.

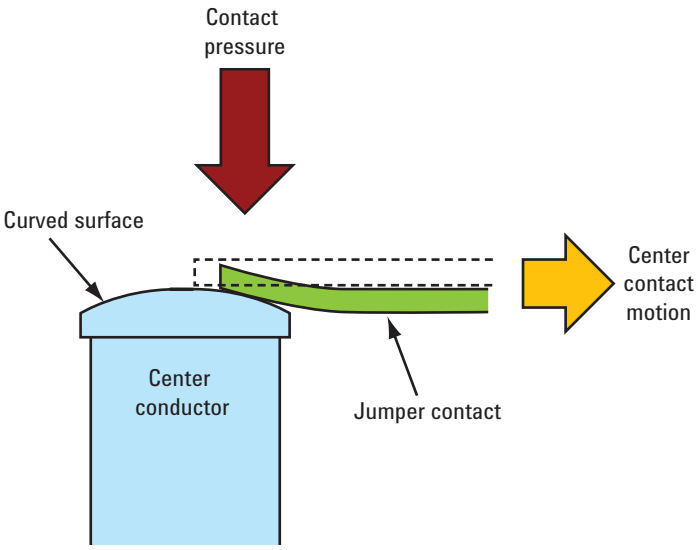

Figure 6. Electromechanical switch mating configuration illustrating microscopic wiping

In Keysight's EM switches, the center conductor profiles of the connectors are designed with a spherical mating surface. This mating surface is slightly curved to create a minor downward force and a small movement between the moving contact and the mating surface. This movement is made possible by a thin and flexible moving contact design. As a result of this action, there is a slight microscopic wiping between these surfaces. This wiping action continuously cleans the contact area by breaking through the surface films and moving debris away.

The geometry and surface texture (plating) of the contacting interfaces are very critical in determining the contact resistance and the life of the contacts. The contact resistance during a wipe is influenced by several factors such as normal force, contact geometry, thickness and composition of the contaminating films, and the length of the wipe. The use of a thin layer of lubricant along with a smooth surface finishing on the jumper contact and center conductor minimizes the effect of friction during the wiping action, greatly prolonging the life of the contacts.

Figure 7 shows a small piece of debris stuck on the surface of the center conductor. The moving contact is being pressed down by the push rod.

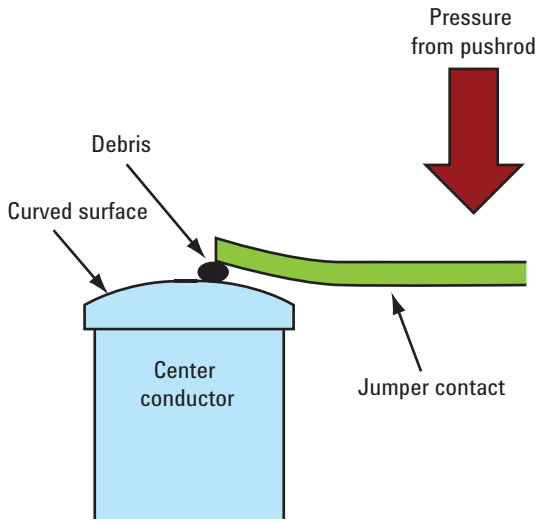

Figure 7. A piece of small debris is stuck on the surface of center conductor

When the pressure is released by the push rod, the moving contact moves upward and sideways to follow the curvature of the center conductor. As a result, the tip of the jumper contact pushes the debris away from the contact area as shown in Figure 8.

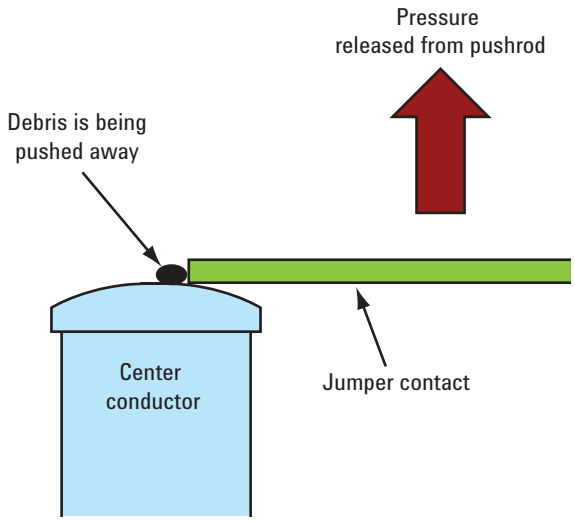

Figure 8. Debris is being pushed away by wiping process of the jumper contact

The pushrod exerts a constant pressure to mate the moving contact with the stationary center conductor. This pressure is applied by the magnetic actuating solenoid, and resisted by the spring effect of the moving contact.

The switch operation not only needs stable contact but also reliable open and closed contacts. This is provided by a lift-off (extracting) force that exceeds the adherence of the sticking contact, even if metallic bindings formed between the two clean surfaces (namely, the contact areas of the moving contact and the center conductor of the connector).

Switch repeatability

Switch repeatability plays an important role in any test system. In test applications where accuracies of less than a few tenths of a dB are required, the system designer must consider the effects of switch repeatability in addition to test equipment capabilities. In automated test systems where switches are used for signal routing, every switch will add to the repeatability error. Such errors cannot be calibrated out of the system due to their random nature. Keysight switches are designed for high repeatability, 0.03 dB maximum over 5 million cycles.

Repeatability is a measure of the change in a specification from cycle to cycle over time. When used as a part of a measurement system, switch repeatability is critical to overall system measurement accuracy. Repeatability can be defined for any of the specifications of a switch, which includes: insertion loss, reflection, isolation and phase. Insertion loss repeatability is specified for all Keysight switches, as this tends to be the specification most sensitive to changes in switch performance.

Effect of repeatability on measurement uncertainty

As mentioned before, repeatability is a measure of the changes in insertion loss or phase for a switch matrix path from cycle to cycle over time. Repeatability ensures accurate test results. S-parameter repeatability is critical because it cannot be calibrated out with test software.

The repeatability of a switch has a direct effect on the measurement uncertainty of a test setup. Figure 9 shows a PNA connected to a multiport test set which is used to test multiple devices. In this example, a total of three 2-port devices can be tested simultaneously, using any port. Since these errors are random and not systematic, root sum square (RSS) is the proper way to calculate the total measurement uncertainty.

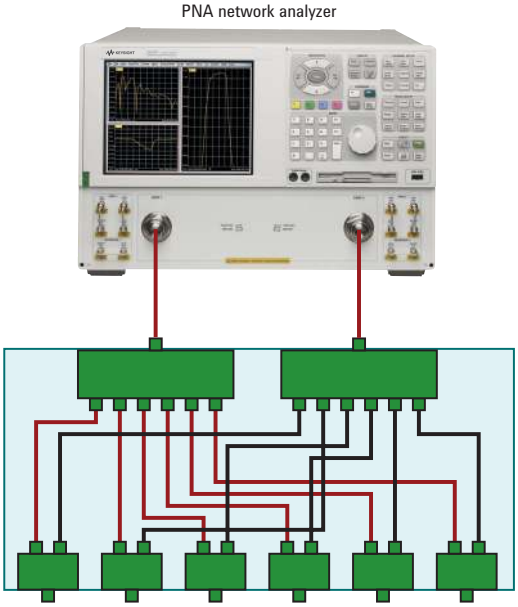

Figure 9. PNA network analyzer with a multiport test set

Here, two scenarios are presented:

Scenario 1
PNA repeatability = 0.01 dB, EM switch repeatability = 0.03 dB
Total measurement uncertainty = $(0.01^2 + 0.03^2 + 0.03^2)^{0.5}$ = 0.044 dB

Scenario 2
PNA repeatability = 0.01 dB, EM switch repeatability = 0.1 dB
Total measurement uncertainty = $(0.01^2 + 0.1^2 + 0.1^2)^{0.5}$ = 0.142 dB

It can be seen that the repeatability of the EM switch has a significant effect on the total measurement uncertainty of the system, affecting the accuracy of all measurements made. Operating life and repeatability are two of the most important considerations when selecting an EM switch. Keysight's EM switches utilize a wiping action design that removes particle buildup to maintain a repeatability specification of 0.03 dB. This is crucial as the repeatability has a significant effect on the total measurement uncertainty of a system.

Switch selection

1. Switch power handling capability

For test and measurement systems, it is vital that the equipment used in high-power applications must be chosen with care to ensure long term reliability and optimum performance. If high-power handling up to a couple 100 watts is required, mechanical switches are the right choice, as solid state switches are limited by the breakdown voltage of the semiconductor.

For switch power handling capability, there are two switching conditions that should be considered: "hot" switching and "cold" switching. Figure 10 shows how the power handling of a typical switch is usually specified in product literature. Hot switching occurs when RF/microwave power is present at the ports of the switch at the time of the switching function. Cold switching occurs when the signal power is removed before activating the switching function. Hot switching causes the most stress on internal contacts, and can lead to premature failure. Cold switching results in lower contact stress and longer life, and is recommended in situations where the signal power can be removed before switching.

Maximum power rating: 1 watt average
Hot Switching: 1 W continuous wave (CW) or average
Cold -switching: 50 W peak (not to exceed 1 watt average)

Figure 10. Typical power handling specifications

Microwave heating is dependent on frequency and power and also ambient temperature. Therefore, these specifications are critical when choosing the right switch for high power applications. Power handling capability decreases with frequency and temperature, and increases with insertion loss. Figure 11 shows an example of the power rating chart for cold switching at 75 degrees C.

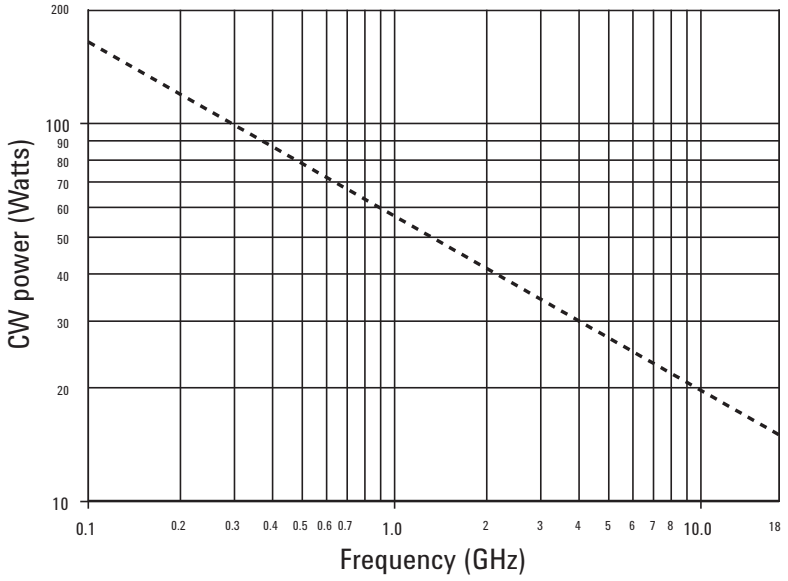

Figure 11. Power rating for cold switching at 75 o C

More information on selecting the right switch technology for other applications can be found in Keysight's application note "Selecting the Right Switch Technology for Your Application", Keysight literature number 5989-5189EN

2. RF characteristics

Keysight's high-performance electromechanical coaxial switches provide reliable switching in signal routing, switch matrices, and ATE systems. With 0.03 dB insertion loss repeatability guaranteed up to 5 million cycles, Keysight high-performance switches provide the RF performance needed from DC to 50 GHz.

Frequency range
RF and microwave applications range in frequency from 100 MHz for semiconductor to 60 GHz for satellite communications. Broadband accessories increase test system flexibility by extending frequency coverage. However, frequency is always application specific and a broad operating frequency may need to be sacrificed to meet other critical parameters.

Insertion loss
In addition to proper frequency selection, insertion loss is critical to testing. Losses greater than one or two dB attenuates peak signal levels, and increases rising and falling edge times. A low insertion loss system can be achieved by minimizing the number of connectors and through-paths, or by selecting low insertion loss devices for system configuration. As power is expensive, especially at high frequencies, electromechanical switches should provide the lowest possible loss along the transmission path.

Return loss
Return loss, expressed in dB, is a measure of voltage standing wave ratio (VSWR). Return loss is caused by impedance mismatch between circuits. At microwave frequencies, the material properties as well as the dimensions of a network element play a significant role in determining the impedance match or mismatch caused by the distributed effect. Keysight switches guarantee excellent return loss performance by incorporating appropriate matching circuits to ensure optimum power transfer through the switch and the entire network.

Isolation
Isolation is the degree of attenuation from an unwanted signal detected at the port of interest. Isolation becomes more important at higher frequencies. High isolation reduces the influence of signals from other channels, sustains the integrity of the measured signal, and reduces system measurement uncertainties. For instance, a switch matrix may need to route a signal to a spectrum analyzer for measurement at –70 dBm and to simultaneously route another signal at +20 dBm. In this case, switches with high isolation, 90 dB or more, will keep the measurement integrity of the low-power signal.

Equal path
There are some applications that require equal paths for amplitude match or phase match. In differential signal systems, or systems where phase matching is critical, equal-length phase-matched paths are recommended. For example, instead of having a low-profile multiport an equal path is required. High-performance multiport switches configured to have the same path lengths between the common port and outer ports are needed for these types of applications. Also, a shorter path length in the switches lowers insertion loss.

Termination
A 50-ohm load termination is critical in many applications, since each opened unused transmission line has the ability to resonate. This is important, especially when designing a system which works up to 26 GHz or higher frequencies where switch isolation drops considerably. When the switch is connected to an active device, the reflected power of an unterminated path could possibly damage the source.

3. Applications and switch options

Switch configurations
Switches come in different configurations providing the flexibility to create complex matrices and automated test systems for many different applications and frequencies. Below is a list of typical switch configurations and usage.

- Single-pole-double-throw (SPDT) switches route signals from one input to two output paths or two inputs to one output path.
- Multiport switches allow a single input to multiple (three or more) output paths. Keysight offers single-pole-three-throw (SP3T), single-pole-four-throw (SP4T), single-pole-five-throw (SP5T) and single-pole-six-throw (SP6T) multiport switches.

- Transfer switches (DPDT) can be used to switch between two inputs and two outputs, as a drop-out switch, for signal reversal, as a SPDT switch, or to bypass a test component.
- Matrix switches can be individually connected via internal microwave switches to form an RF path. They can be configured for blocking 1 x 5, 2 x 4, or 3 x 3 switching applications.
- Bypass switches insert or remove a test component from a signal path.

Driving the switch
There are 3 common switching types: failsafe, normally open, and latching. For failsafe switch, the switch will always move back to a predetermined position when the drive voltage is removed. As for normally open switch, all the output ports will be disconnected once the drive voltage is not applied. Latching switch will always remain at the last position when the drive voltage is removed.

For Keysight latching switches, only a 15 ms pulse will be required for the switch to latch and no continuous driving voltage is required to maintain the position. In general, latching switches are the preferred switch type due to the power and thermal characteristics.

Switching time
Switching time specifies an end value of 90% of the settled/final value of the RF signal. As we know, electromechanical switches have a longer switching time compared to solid state switches. As a result, if the switch is driven with a pulse signal, it is critical that the pulse duration is not shorter than the switching time in order to make sure that the switch can fully latch.

Electromechanical switch option descriptions
In general, electromechanical switches will be comprised of the options listed below. Various options are needed for applications in the industry.

Indicator — A set of internally mounted contacts mechanically connected to the switch actuator allowing external monitoring of switch RF status.

Suppression diodes — This option offers fast-recovery rectifiers (diodes) connected in parallel with the coils of the switch to suppress any transient voltage generated by the coils. Suppression diodes are recommended with TTL logic.

TTL logic — Transistor-transistor-logic driver circuitry which enables the status of the switch to be controlled by the level of the TTL logic input.

Current interrupt — This applies to a latching switch only. A switch that has the ability to disconnect the actuator drive circuit so that DC current will not be consumed after switching has been accomplished.

Considerations when Designing a Switch Matrix

Use of terminations

Many of the Keysight RF coaxial switches can be purchased either with or without internal 50 Ω terminations. Terminating unused paths is especially useful for keeping the correct impedance to a source or input while that device is not connected to the test path. An example of the difference between terminated and non-terminated options is the N181x series of switches. The N1810TL is an internally terminated switch (note the "T" in the part number) whereas the N1810UL is an un-terminated version. All of Keysight's electromechanical switches with this built-in termination automatically engage terminations to unused ports. This eliminates the need to add extra code to switching solutions to ensure unused paths are not causing reflection. However, it is important to note that all internally terminated Keysight switches are limited to 1 watt average power. For tips on switching power levels higher than 1 watt, see the section below on Handling high power.

Handling high power

The best way to handle high power with RF coaxial switches is to use electromechanical switches that do not have internal terminations. All of Keysight's switches with built-in termination are limited to 1 watt of average power from DC to their rated frequency. This means that any internally terminated switch should not be used for signals greater than 1 watt average power.

To add higher power capability and still have termination on unused paths, use a 5-port switch such as the N1812UL. By adding external terminations to ports 1 and 5 of this switch, it can now be used as a higher-power terminated SPDT switch. This can be seen in Figure 12 below where port 3 becomes the "common" and ports 2 and 4 are the switched paths.

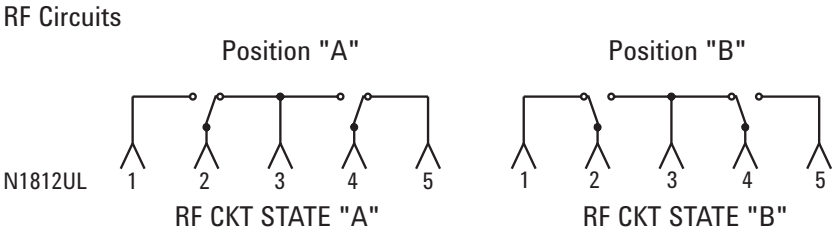

Figure 12. Schematics for N1812UL

The power handling capability of internally unterminated switches is frequency dependant and follows a power curve as shown in Figure 11 on page 15. Please note this power curve applies only for cold switching applications and at ambient conditions of 75 C°.

All specifications for Keysight electromechanical switches are for hot switching applications. Hot switching is a use model in which the position of a switch is changed while RF power is present. Of high importance among these specifications is the 0.03 dB repeatability at 1 watt over 5 million cycles. In cold switching applications (where RF power is not present), the cycle count is considerably higher. For a more in depth look at hot versus cold switching, see application note Power Handling Capability of Electromechanical Switches, Keysight literature number 5989-6032EN.

Signal conditioning

A switch matrix chassis can be used for applications other than just switching. The L449xA line of chassis have been designed with mounting brackets and additional DC power outputs to support signal conditioning with other passive and active components. This provides a convenient way to neatly package all RF routing functions into a self contained unit.

Common components that can be added to the L449xA chassis are:
- Attenuators
- Terminations
- Couplers
- Dividers
- Amplifiers
- Programmable Attenuators

When adding active components be sure to follow the specifications for available power from each DC port in the L449xA chassis.

Matching phase levels on differential lines

Sometimes it is necessary to provide automated switching of differential or other lines that need to be phase matched. The key to creating a good phase match between switched lines is having cables with the same electrical length and number of bends, consistent ambient temperature, and switches that have repeatable delay characteristics.

Since the electrical length of a cable changes with temperature, it is important that all cables within a phase matched system either maintain the same temperature or have the same rate of change. This ensures that the dielectric in each cable remains the same size with respect to one another and keep the same relative electrical length. In addition, it is important that each matched cable has the same angle and number of bends. A bent dielectric will exhibit a different rate of change over temperature than that of a straight one. Cables that have the same number of bends and same angle of bend will more closely track as temperature changes.
Important guidelines to follow when phase matching:

- Use semi-rigid cable
- Match the angle and number of bends
- Maintain consistent temperatures (either same temperature or same rate of change)
- Use micro-porous dielectric cable (better stability over temperature)
- Use switches with repeatable delay characteristics

All of Keysight's electromechanical switches will exhibit a typical repeatable delay to within +/- 0.32 ps at a constant temperature.

Semi-rigid vs. flexible cable

When designing a switch matrix, the internal connection can be made by semi-rigid, semi-flex, or flexible cabling. Which one is used depends on the form factor and use of the product. Below are helpful guidelines when choosing cables.

Preformed semi-rigid cabling should be considered if:

- The matrix has higher density of RF paths (better managed routing)
- Consistent path performance is desired
- It is important to have easier access within the chassis
- CAD semi-rigid design software is available

Non-rigid cabling (including semi-flex and flexible) should be considered if:

- Flexible matrix design requires future component changes
- Lower cost is desired
- There is no access to CAD semi-rigid design software

Thermal considerations

Maintaining temperature of electromechanical switches is one of the best ways to ensure continued performance. There are basically two types of RF switches, failsafe and latching. Failsafe switches are designed to return to a known state when power is removed, typically called a Normally Closed position. This ensures a known power-up state but requires constant power during operation of the Normally Open position. As such heat is added and removed from the switch depending on the selected position. This creates instability in the performance of the switch as well as reduces the overall life due to thermal cycling. All of Keysight's electromechanical switches are latching. Latching switches use a pulsed signal to switch positions which means current is only applied briefly. This maintains a more consistent temperature and aids in extending the life of a switch. Some applications require the use of failsafe switching for equipment safety reasons. However, any application that doesn't should always use latching switches.

Easy access for maintenance

When designing a switch matrix, consideration should be given to how maintenance will be performed. Service from both the control as well as RF sides of each switch is important. Mounting switches vertically so that all RF paths are either on the top or bottom will help to accomplish this. Since the control cables are much more flexible than any type of RF cable, switches should be mounted so that insertion is from the control side. In this way, a switch can easily be removed without needing to remove any RF cabling. Both control and RF lines should run in parallel lines between the switches to minimize overall component disturbance. This is where an advantage can be realized with pre-bent semi-rigid cables. Any cable crossing over a switch that is not necessary for its function will be in the way during repair and maintenance.

Spares for quick repairs

Although Keysight switches are specified 5 to 10 million cycles before needing to be replaced, it is a good idea to have spares on hand for quick repair. If the switch matrix cannot afford to be down, having approximately 2% spares on hand can alleviate the pain of normal product lead time in the event a switch needs to be replaced.

Position indicators

Many of Keysight's switches can be purchased with real time read back of position. This is especially useful when it is important to verify actual switch positions. Under normal circumstances, software within the switch controllers keeps track of commanded positions and reports back. With the position indicator option, a separate set of pins or current readback is used to physically read the internal position and report it. It is important to note the default on switch controllers is to read back the commanded position. Proper setup of the controller is required to ensure actual read back when using this option.

Switching Platforms/Control Methods (11713B/C, 34980A, L4490/1A)

After selecting the RF and microwave components, consider how the components will be mounted and controlled. As simple as it may sound, managing power, control and mounting of microwave components can be a challenge in itself. Items to consider include:

- Electrical drive voltage, current and pulse requirements
- Mechanical mounting area and brackets
- Switch control via software or front panel access
- Ease of switch system initial turn-on and debug
- Long term supportability and maintenance
- Documentation and support

Fortunately, many off-the-shelf switch driver products are available to help. These switch driver products include built in power sources, intelligent software control, and are designed to help you quickly configure and get your switching solution up and running. In addition, many of the switch driver products include pre-fabricated cables for common switches and attenuators. This can save you significant time and money, and improves long term support. Keysight provides a variety of switch driver products, one of which will fit your needs.

Figure 13. Driving the switches using 11713B/C

Small scale, lower cost

For cost sensitive small scale switching, the USB based Keysight U2121A DI/DO module with optional U2931A RF switch integration kit is one solution to consider. The simplified installation and operation of the DIO card and the breakout module allows straightforward control of small RF switching applications. This helps you quickly create simple yet cost-effective RF switch systems.

Bench top switching solution

If you only have a few switches or attenuators to control and your primary use is bench-top, then a driver unit with front panel push button control is the best solution. Select a product that provides an easy-to-use intuitive interface including a large LCD display to indicate the current state of the switches. A built-in power source with a programmable drive to support latching, TTL or non-latching drive styles is also important. The Keysight 11713B and 11713C attenuator/switch drivers provide remote or front-panel drive control for two or four programmable attenuators and two or four SPDT switches. The 11713B/C can also be used to independently control 10 to 20 switches. The Keysight 11713B/C is offered with nine optional plug-in drive cables to provide point-to-point connection to Keysight programmable attenuators and switches.

System based switching solution

As the complexity of your switching increases, the type of switch driver controller needs to change as well. To support higher channel count and system based switching solutions, a variety of switch drivers are available. The Keysight L4445A, 34980A/34945A, L4490A and L4491A are all scalable platforms that are ideally suited for system applications. In some cases, you may want to construct your own RF/microwave switch tray for mounting the switches. The L4445 and 34980A with 34945 plug-in modules are ideal building blocks for these applications. A built-in +24 V power source for driving switches and attenuators is standard in all models. The programmable drivers allow either TTL or low side open collector drive topologies. In addition, the drivers can be configured for either continuous or pulsed drive, which makes driving latching relays simple. A built-in sequencer allows set-up of complicated switch configurations. You'll find the sequencer very helpful when you need controlled break before making connections, or when programming complicated attenuator setups.

Summary of Keysight's switching platforms

Figure 14. 34945A for RF switching

Figure 15. L4490A 2U RF/microwave switch platform

Figure 16. L4491A 4U RF/microwave switch platform

All Keysight microwave switch driver products come with configuration and programming documentation. This is particularly important when faced with fast paced projects that need to be completed quickly. Table 3 shows the broad selection of Keysight driver products. Notice the internet links to detailed configuration and operating documentation.

Table 3. Keysight's complete line of microwave switch drivers

Keysight switch driver products						
Features	U2121A with U2931A	11713B/C	L4445A	34945A	L4490A	L4491A
Number of control lines	5	20	64 to 512	64 to 512	64	128
Front panel control	No	Yes	No	Yes	No	No
IO interfaces	USB	GPIB, USB, LAN	LAN, GIB	LAN, USB, GPIB	LAN, USB, GPIB	LAN, USB, GPIB
Mechanical mounting area	No	No	No	No	Yes	Yes
Built in voltage source	Yes: 24V	Yes[1]: 5V, 15V, 24V	Yes: 24V	Yes: 24V	Yes: 24V	Yes: 24V
Drive type supported	OC, Pulsed	TTL, OC, Pulsed	TTL, OC, Pulsed	TTL, OC, Pulsed	TTL, OC, Pulsed	TTL, OC, Pulsed
Application	Cost effect, portable and small system applications	Easy-to-use benchtop applications	System and reconfigurable benchtop applications	System and reconfigurable benchtop applications	System and reconfigurable benchtop applications	System and reconfigurable benchtop applications
Picture						
Product and configuration documentation	www.keysight.com/find/U2931A	www.keysight.com/find/switchdrivers	www.keysight.com/find/L4445A	www.keysight.com/find/34980A	www.keysight.com/find/L4490A	www.keysight.com/find/L4491A

1. 11713B comes with 24V only. 11713C comes with 5V, 15V, and 24V.

Selecting the right platform for your needs

Research and development applications

R&D engineers working at their lab bench commonly need to control microwave switches. Like many bench-top instruments, it is helpful to have a nice, front panel interface. Bench-top space is limited, so a compact switching solution is very helpful. Also, project design assignments can change quickly, forcing a reconfiguration of your switch topology, sometimes in the matter of minutes.

The way R&D engineers control switches will differ depending on the stage of the design. Early in the design phase, the engineer will likely want a simple method to close switches, such as front panel push button control. As the project proceeds, it may be important to automate some of the tests to allow extended test sessions. So having a convenient method to connect your PC to the switch control unit and write programs is also important. As such, a switch control unit with both front panel as well as software control works best.

The 11713B/C switch control units are examples of switch products that work very well for bench-top use. The large front panel LCD display and pushbuttons allows the engineer easy control of switches during initial test. And as the development progresses, the GPIB, LAN or USB interface can be utilized for software control of the switches enabling automated testing. This is extremely helpful when you need to run an automated test for an evening or weekend.

Figure 17. 11713C for R&D bench-top use

The 11713C built-in power source supports either +24V, +12V or +5V drive requirements, and can control most relays or attenuators found today. No need for an external supply which keeps your bench workspace clear of clutter.

Another aspect to consider is cabling to control the units. Cables may seem simple and trivial to design and assemble, but the last thing you want to do is spend valuable engineering time building cables. A better solution is selecting a switch control unit that offers a portfolio of relay switch cables constructed specifically for the relays you want to control. Also it is helpful to have a stock of commonly used cables on hand. That way, you can reconfigure your microwave switches at a moment's notice.

Another consideration is physical space and mechanical mounting of the switches. In only the very simplest cases can microwave switches simply be placed on the bench-top. The majority of the time a microwave switch tray is used to mount the switches. Consider the case where flexible semi-rigid coax is used to route signals between the switches. Mechanically mounting the switches is a must to prevent flexing and damage to the cables.

When using a control unit such as the 11713B/C, a sheet metal switch tray can be constructed. Whereas, in larger scale bench-top test cases, where more switches or attenuators need to be mounted and controlled, the Keysight L4491A or L4490A can be a good fit. The L4490/1A provides not only pre-fabricated cables and simple soft front panels for easy bench-top control, but also a mechanical mounting area for the switches, as well as prefabricated mounting brackets. The L4490/1A is highly reconfigurable, and a good choice for bench-top applications where you need to control many switches and reconfigure quickly.

Design validation applications

New products need to pass extensive product validation testing, where functional testing as well as long term chamber testing will be done in the quality control (QC) lab. Design cycles are short and new products coming from the lab typically have a tight schedule. QC labs may see new products every few months and the test switching topology needs to change to accommodate them. Usually many products are placed in a temperature chamber and tested at the same time making the number of switches and signal interconnections very high. The switch unit used must be scalable and capable of managing this large number of connections. Even the physical mounting of the large microwave switches may be a challenge. As such, it is common to see larger rack-mounted switch controller assemblies in QC lab test applications.

Figure 18. The L4490/91A switch platforms provide large mounting area, up to 128 drivers and convenient LAN (LXI) web server based control panel for easy software development.

In the QC lab, the switch controller must be easy to reconfigure to adapt to the next test assignment, aggressive project launch schedules means there is little time for product change-over. The switch unit must be easy to use, and tools need to be available for complex switch topology turn-on and debug. QC lab applications tend to use many switches, so large mechanical mounting areas are a must. The switch mounting area should also have standard bracket mounting footprints, and a large selection of pre-fabricated mounting brackets available. Standard cable sets for the microwave switches enables quick assembly and efficient long term maintenance.

The large number of switches needed in QC lab applications naturally demands switch products with a large number of drivers. It is common to see applications needing over 64 switch drivers in one test system.

In the QC lab, software is the primary method for controlling the relays. Also, the software controlling the switch units routinely needs to be modified as new projects arrive for test. Hence, switch control units that provide extensive programming command sets, easy-to-use soft front panels and versatile software interface choices are important.

Figure 19. The 34980A/34945A provides extensive expansion capability for those preferring to construct their own switch mounting.

The L4490/91A switch units work well in the QC lab since the built-in web server provides excellent control and debug capabilities. As the control software for a new product is being debugged, the LXI built-in web server can be used to monitor and control the state of the switches. Errors in the application software can quickly be discovered and corrected using the LXI monitor.

The large mechanical mounting area provided by the L4490A/L4491A gives ample room for mounting microwave and RF switches.

For those who prefer to create their own rack mounted switch tray, consider using the 34980A switch/measure unit with the 34945A switch control driver. The 34980A/34945A provides the same flexible software control features of the L4490/91A and the remote mounted EXT driver can be mounted on the switch tray for convenient control.

Manufacturing applications

Manufacturing requirements of microwave and RF switch controllers are similar to quality control lab needs (as discussed in the previous section), except reconfiguration does not occur as often. The number of switches may be large and software tools are required to quickly develop new test systems. Test system design and deployment schedules are typically demanding, so quick time to deployment is critical. Large systems such as the 34980A, L4490A or L4491A work best in these environments. Also, it is common for manufacturing test systems to have a long production life, therefore it is important to have long term reliability. Systems configured and deployed into manufacturing environments may be expected to last many years or even decades and documentation for long term support is critical.

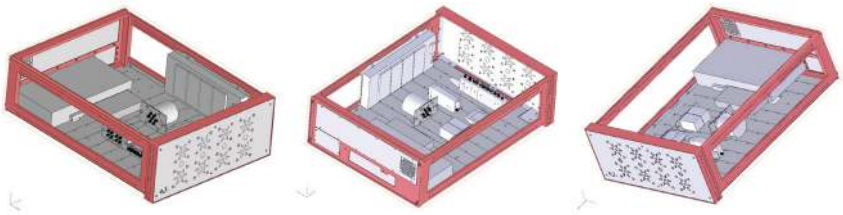

Figure 20. The L4490A/91A CAD models make switch system design and documentation extremely fast.

In manufacturing, the test systems are typically replicated many times across the production floor. Consistency across the switch platforms is very helpful for system deployment and long term support.

For large microwave and RF switch assemblies with semi-rigid coax, design methods commonly employ CAD tools to manage the complexity. One helpful feature of the Keysight L4490A/L4491A is the availability of CAD design files. For the L4490A/91A, Keysight Technologies provides the CAD files – not only for the switch assembly, but also for the switches and mounting brackets. By using common CAD tools and the Keysight provided CAD models, system development, deployment and documentation time is reduce substantially.

Contact your Keysight sales office for additional information on the L4490A/91A CAD models.

Some manufacturing systems use PXI platforms for RF and microwave instrumentation. PXI modular chassis are very compact, which helps to reduce the overall size of the test system. In cases where a few switches are required to complete a PXI based test system, PXI microwave switch modules may be the best solution. If the test system needs a significant number of switches, choosing a L4490A/91A based switch platform is still the best approach.

If PXI RF and microwave switch modules work best in your situation, Keysight offers a line of RF and microwave PXI switch modules to complete your PXI based test systems. For more information on all of Keysight's PXI products go to www.Keysight.com/find/modular

Switch Matrices: the Make vs. Buy Dilemma

With the introduction of the L449xA switch platforms, building a high-quality switch matrix has never been easier. All manner of components for easy assembly are now available from simple SPDT switches to double stage programmable attenuators to signal amplifiers.

Advantages of L449xA based solutions:

- Flexible and easily configurable switch mounting system for a robust and reliable signal routing system
- 3D models for quick layout and documentation of RF switches and cables
- Graphical Web interface for quick setup, troubleshooting and support
- Easy connection and control of all the most popular microwave switches and attenuators
- Effective switch management with user-defined sequences, relay counter, exclude lists, and switch closure verification
- Software drivers for all the most common programming environments
- LXI compliance includes Web interface and built-in Ethernet connectivity

Keysight recognizes that many engineers like to design and build their own equipment. This is why Keysight has a wide range of tools available to help in the process and can provide the mounting brackets, signal distribution boards, and control cables necessary to make this happen in your own lab. Keysight also provides a cost competitive high-quality custom switch matrix service for those who don't have the time to do it themselves. As with all decisions there are advantages and disadvantages to each method. Use the following as guidelines in answering the question of whether to make or buy.

Make

Making your own switch matrix gives ultimate control over the design, build, and implementation to solve RF switching needs. To aid in this process, Keysight has available 3-D models of both the L4490A and L4491A platforms. This allows the engineer ultimate flexibility in being able to test different layout scenarios prior to committing to an actual configuration. RF coax routing can be easily accomplished using semi-flex RF cable. This is a tin coated cable that bends easily by hand and provides excellent RF performance.

Figure 21. Sample in-house switch matrix design

Consider this solution if you:

- Have the time to design, procure, and build in-house
- Have resources available for the task
- Require ultimate flexibility in an environment that requires frequent reconfiguration
- Prefer a quick way to design and build your own custom switch solution

Buy

Many times engineers do not have the time or resources to design, build, and test their own switching solutions. Having Keysight design and build a switch matrix provides the ability to take advantage of our deep expertise in RF/microwave instrumentation and measurement science while solving time/resource constraints. Keysight can create optimal solutions of switch matrices that provide cost effective designs for specific applications. Keysight uses pre-bent semi-rigid RF cabling specifically designed for use in each custom matrix. Let our experienced system service and support engineers help with your custom switching needs.

Consider this solution if you:

- Have limited resources whose talents can better be used elsewhere
- Would prefer a fully assembled, tested and documented solution
- Don't know full requirements and would like help in defining
- Want high performance using high-quality semi-rigid cables along with Keysight switches
- Require a solution with full regulatory certification such as: NRTL, CSA, or CE
- Have custom requirements but not the time to develop and test in-house

Conclusion

In this application note we have provided solutions to help you select and build your own switch matrix based on your application needs. Whether you work in LXI or PXI platforms, Keysight provides switching solutions for your RF signal routing.

Need help? Let Keysight save you time and effort, our experts design custom solutions that meet your test and measurement requirements.

myKeysight

www.keysight.com/find/mykeysight
A personalized view into the information most relevant to you.

www.axiestandard.org
AdvancedTCA® Extensions for Instrumentation and Test (AXIe) is an open standard that extends the AdvancedTCA for general purpose and semiconductor test. Keysight is a founding member of the AXIe consortium.

www.lxistandard.org
LAN eXtensions for Instruments puts the power of Ethernet and the Web inside your test systems. Keysight is a founding member of the LXI consortium.

www.pxisa.org
PCI eXtensions for Instrumentation (PXI) modular instrumentation delivers a rugged, PC-based high-performance measurement and automation system.

Three-Year Warranty
www.keysight.com/find/ThreeYearWarranty
Keysight's commitment to superior product quality and lower total cost of ownership. The only test and measurement company with three-year warranty standard on all instruments, worldwide.

Keysight Assurance Plans
www.keysight.com/find/AssurancePlans
Up to five years of protection and no budgetary surprises to ensure your instruments are operating to specification so you can rely on accurate measurements.

www.keysight.com/quality
Keysight Technologies, Inc.
DEKRA Certified ISO 9001:2008
Quality Management System

Keysight Channel Partners
www.keysight.com/find/channelpartners
Get the best of both worlds: Keysight's measurement expertise and product breadth, combined with channel partner convenience.

ATCA®, AdvancedTCA®, and the ATCA logo are registered US trademarks of the PCI Industrial Computer Manufacturers Group.

www.keysight.com/find/switches
www.keysight.com/find/L4491A
www.keysight.com/find/switchmatrix

For more information on Keysight Technologies' products, applications or services, please contact your local Keysight office. The complete list is available at:
www.keysight.com/find/contactus

Americas	
Canada	(877) 894 4414
Brazil	55 11 3351 7010
Mexico	001 800 254 2440
United States	(800) 829 4444
Asia Pacific	
Australia	1 800 629 485
China	800 810 0189
Hong Kong	800 938 693
India	1 800 112 929
Japan	0120 (421) 345
Korea	080 769 0800
Malaysia	1 800 888 848
Singapore	1 800 375 8100
Taiwan	0800 047 866
Other AP Countries	(65) 6375 8100
Europe & Middle East	
Austria	0800 001122
Belgium	0800 58580
Finland	0800 523252
France	0805 980333
Germany	0800 6270999
Ireland	1800 832700
Israel	1 809 343051
Italy	800 599100
Luxembourg	+32 800 58580
Netherlands	0800 0233200
Russia	8800 5009286
Spain	0800 000154
Sweden	0200 882255
Switzerland	0800 805353
	Opt. 1 (DE)
	Opt. 2 (FR)
	Opt. 3 (IT)
United Kingdom	0800 0260637

For other unlisted countries:
www.keysight.com/find/contactus
(BP-06-23-14)

This information is subject to change without notice.
© Keysight Technologies, 2010-2014
Published in USA, July 31, 2014
5990-6169EN
www.keysight.com