Powering Collaboration and Innovation
in the Wireless and Digital Arenas

Agilent Measurement Forum 2010

LTE Throughput Test Using SystemVue

Dingqing Lu

Agenda

SystemVue Integrated Solutions

Receiver Throughput Test Solutions

- LTE FDD
- LTE TDD
- WiMAX Test Solutions

Conclusions

Integrated Solutions

Integrated test system:

- System level tests using multiple instruments, including HW and SW, need a software to integrate and manage to
  - Simplify system setup
  - Automate tests
- System tests usually need specific waveforms and measurements based on test standards. Sometimes, required waveforms and measurements are not available using regular HW instruments
- Receiver System performance tests usually require a golden receiver to provide test references. During the developing period in a new product life cycle, any receiver has not been built up. In this case, it would be very nice to have software receiver to test your receiver system

SystemVue Integrated Solutions

SystemVue as a Instrument Manager

- Integrate Instruments HW and SW together as a test system. Without integration, instruments are just pies by pies and each of them only have one single function. It is hard to do system test
- Controlling Instruments
  - Invoke instruments one by one according to desired order
  - Without controlling, it is very hard to set up auto-test systems properly

SystemVue Integrated Solutions

Generating Custom Waveforms with SystemVue

- SystemVue simulation waveforms can be automatically downloaded to vector signal generators such as ESG/MXG/PSG for HW testing purpose
- Mixed-mode, multi-modulation, specific framed data, special modulation data
- Radar, SatCom, MilCom signals also can be generated

SystemVue Integrated Solutions

Acquiring and Processing Data with SystemVue

- Data captured by vector signal analyzers can be automatically streamed back to SystemVue
- Acquired data can be further processed in SystemVue to get more information

SystemVue Integrated Solutions

Extending Measuring capabilities for instruments

- More generic measurements such as BER, BLER, Throughput can be added for regular signal analyzers
- More specific measurements Standard required such as Sensitivity, adjacent channel Selectivity and more also can be added

SystemVue Integrated Solutions

Designing Embedded Systems with SystemVue

- Receiver test using Instruments always requires a golden receiver
- During the developing period for a new product life cycle , the golden receiver is not ready yet, software receiver in SystemVue can be embedded into the test system for receiver-troubleshooting and performance evaluation

Example System Diagram

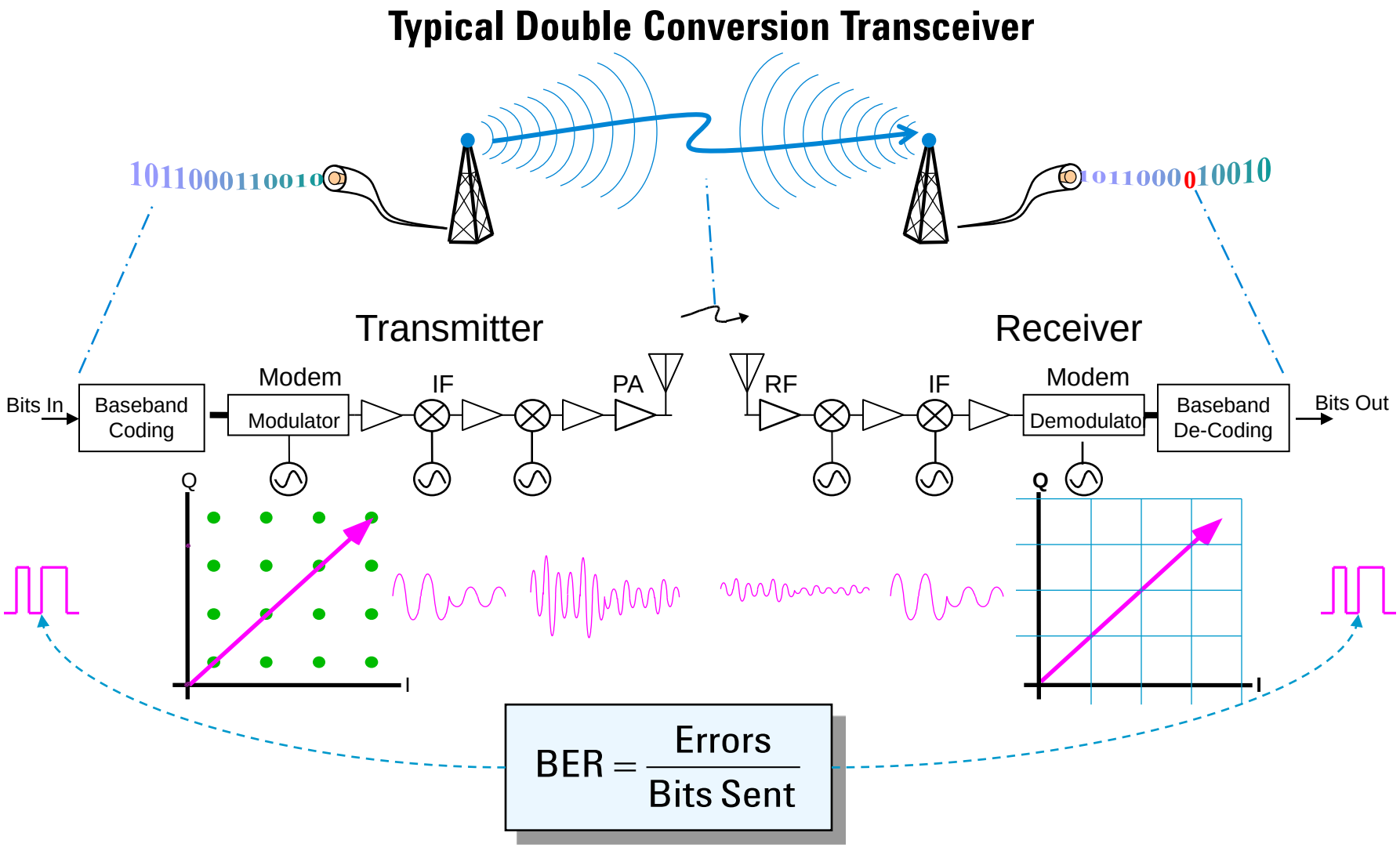

$$BER = \frac{Errors}{Bits\ Sent}$$

Receiver Trouble Shooting using SystemVue

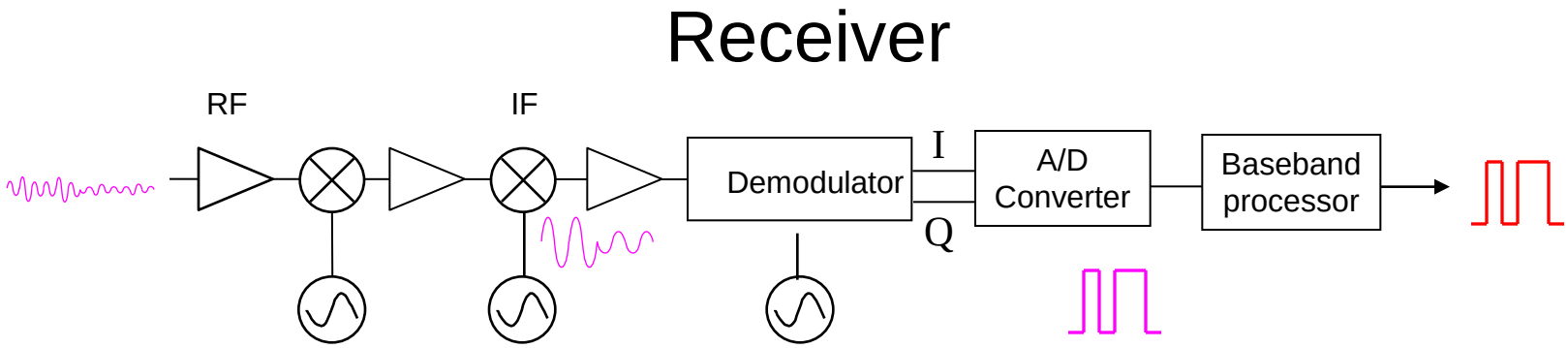

- For all advanced wireless systems, transmitters can be structured directly based on standards. There are not a lot of algorithms required.
- Receivers are more complicated. Most of advanced components with IPs are in receivers. Tools for receiver trouble shooting will be very helpful for R&D people to make good receivers.
- SystemVue can provide reference receiver and help for trouble shooting receivers

Receiver Trouble Shooting using SystemVue Receiver as a Reference Receiver

1. Perform a simulation to get measurements at the RF Output as references

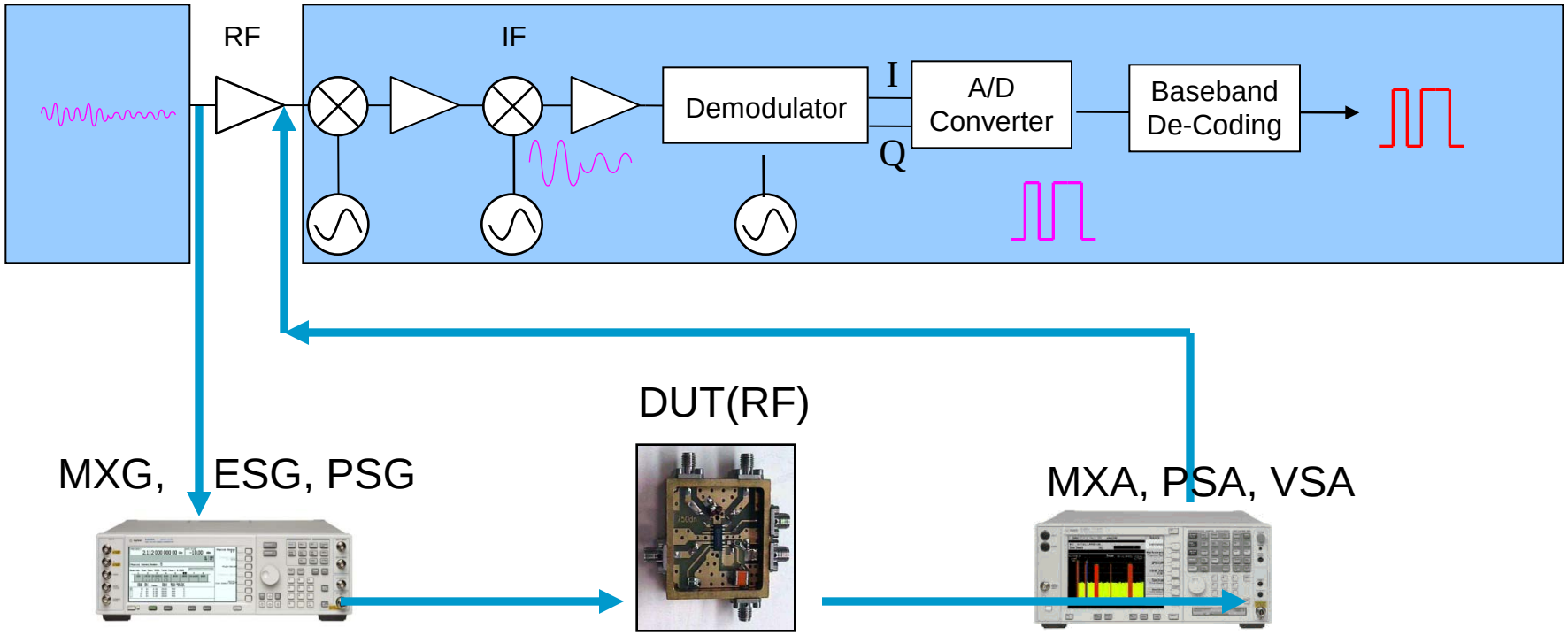

2. Using SystemVue, get test measurements, compare it to simulation references and help trouble shooting

Receiver Trouble Shooting using SystemVue Receiver as a Reference Receiver

1. Perform a simulation to get measurements at the IF Output as references

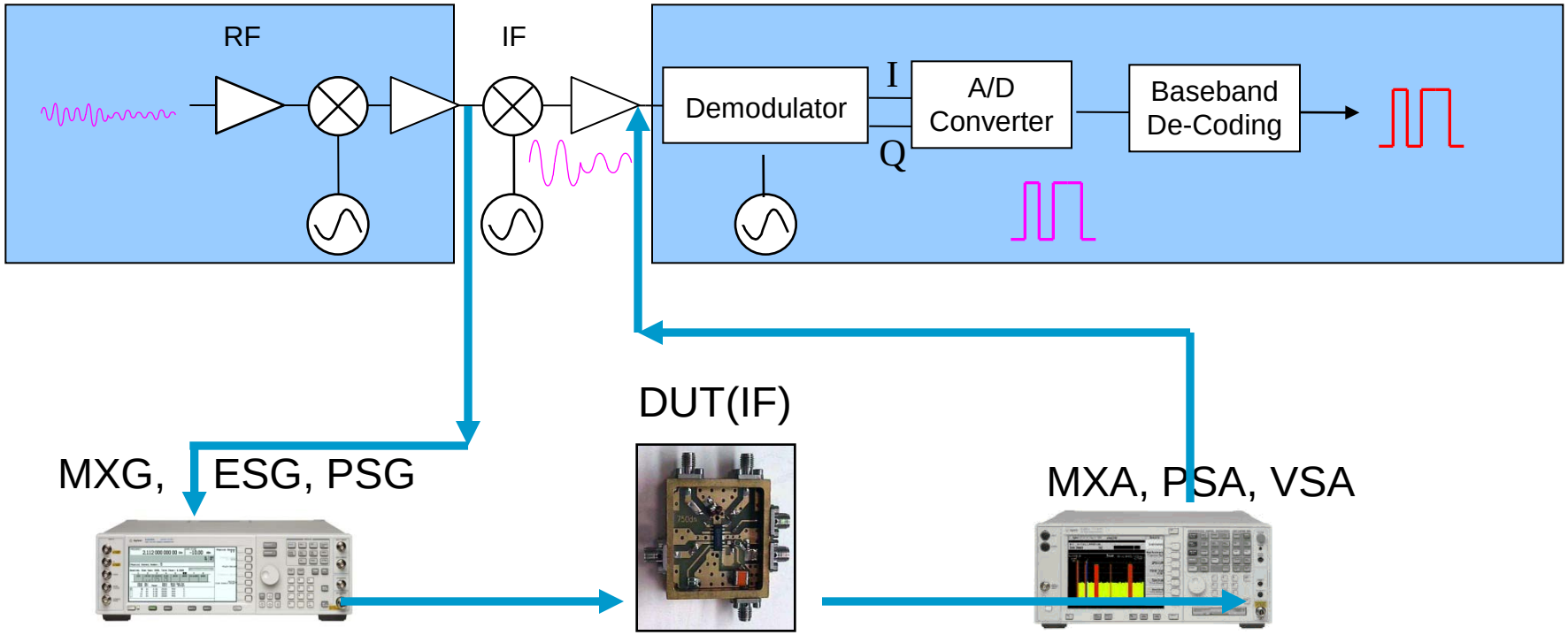

2. Using SystemVue, get test measurements, compare it to simulation references and help trouble shooting

Receiver Trouble Shooting using SystemVue Receiver as a Reference Receiver

1. Perform a simulation to get measurements at the IF Output as references

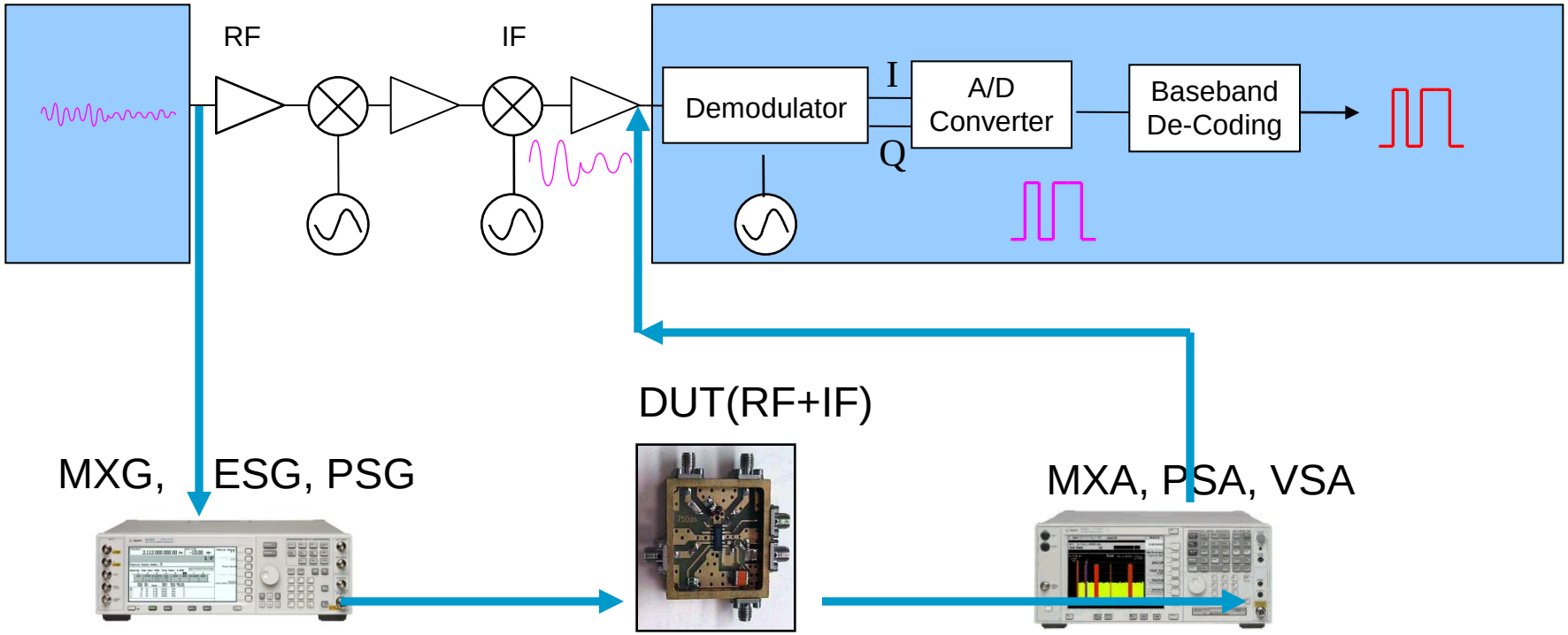

2. Using SystemVue, get test measurements, compare it to simulation references and help trouble shooting

Receiver Trouble Shooting using SystemVue Receiver as a Reference Receiver

1. Perform a simulation to get measurements at the A/D Output as references

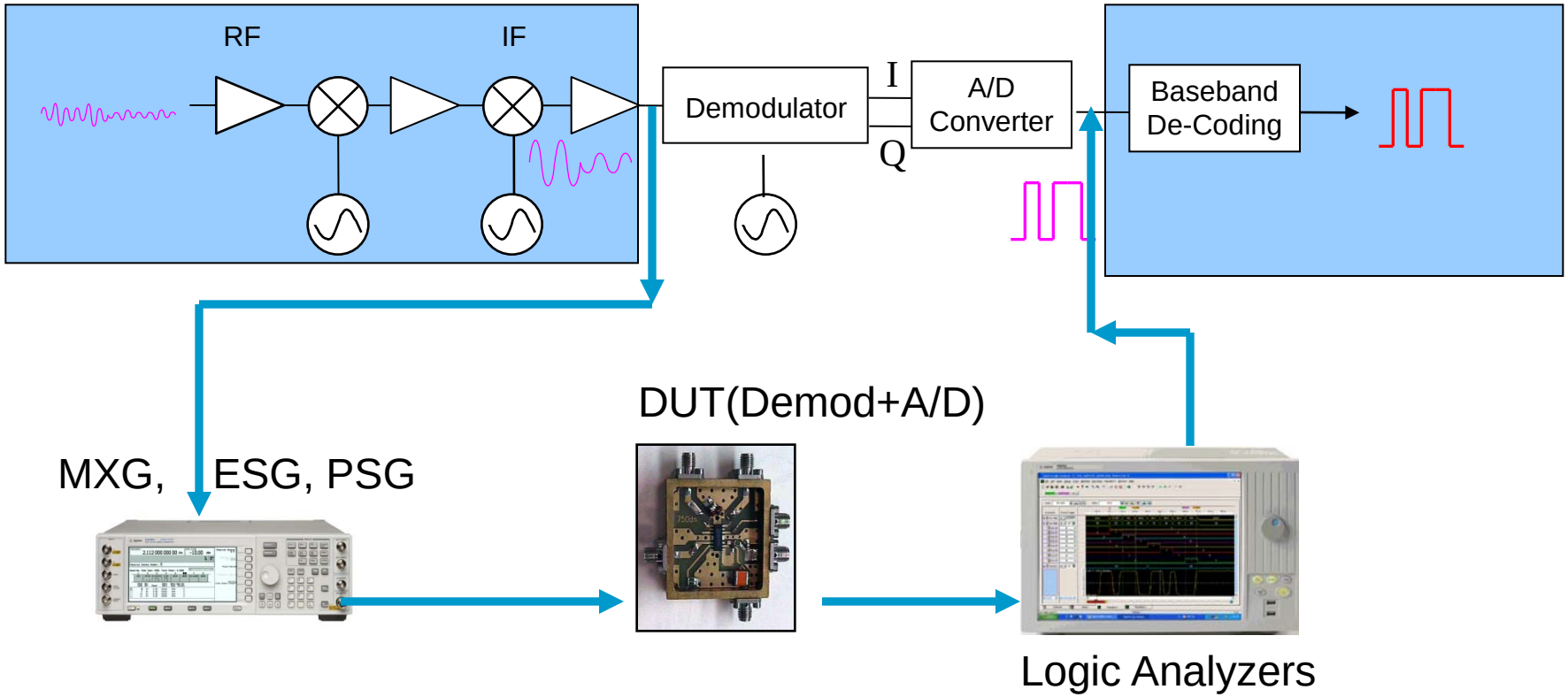

2. Using SystemVue, get test measurements, compare it to simulation references and help trouble shooting

Receiver Trouble Shooting using SystemVue Receiver as a Reference Receiver

1. Perform a simulation to get measurements at the A/D Output as references

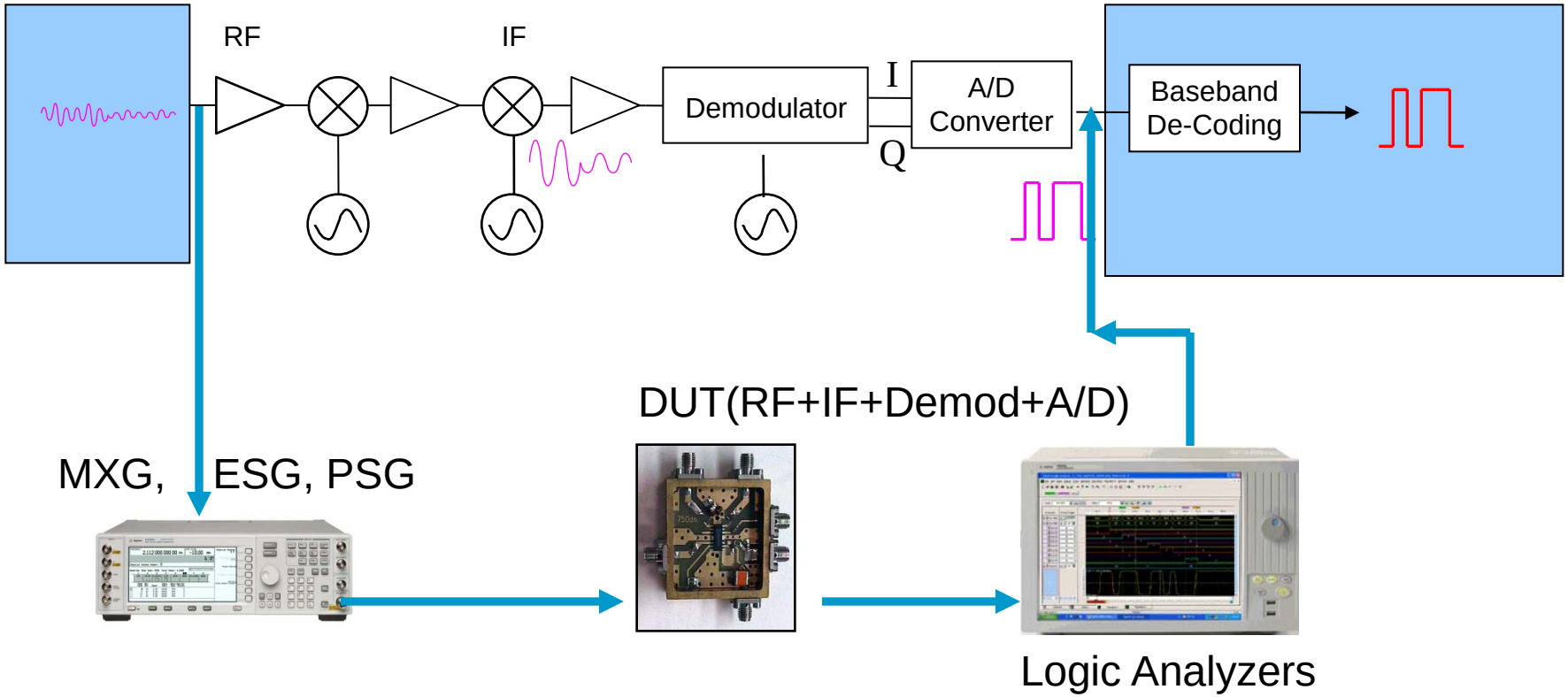

2. Using SystemVue, get test measurements, compare it to simulation references and help trouble shooting

Receiver Trouble Shooting using SystemVue Receiver as a Reference Receiver

1. Perform a simulation to get measurements at the A/D Output as references

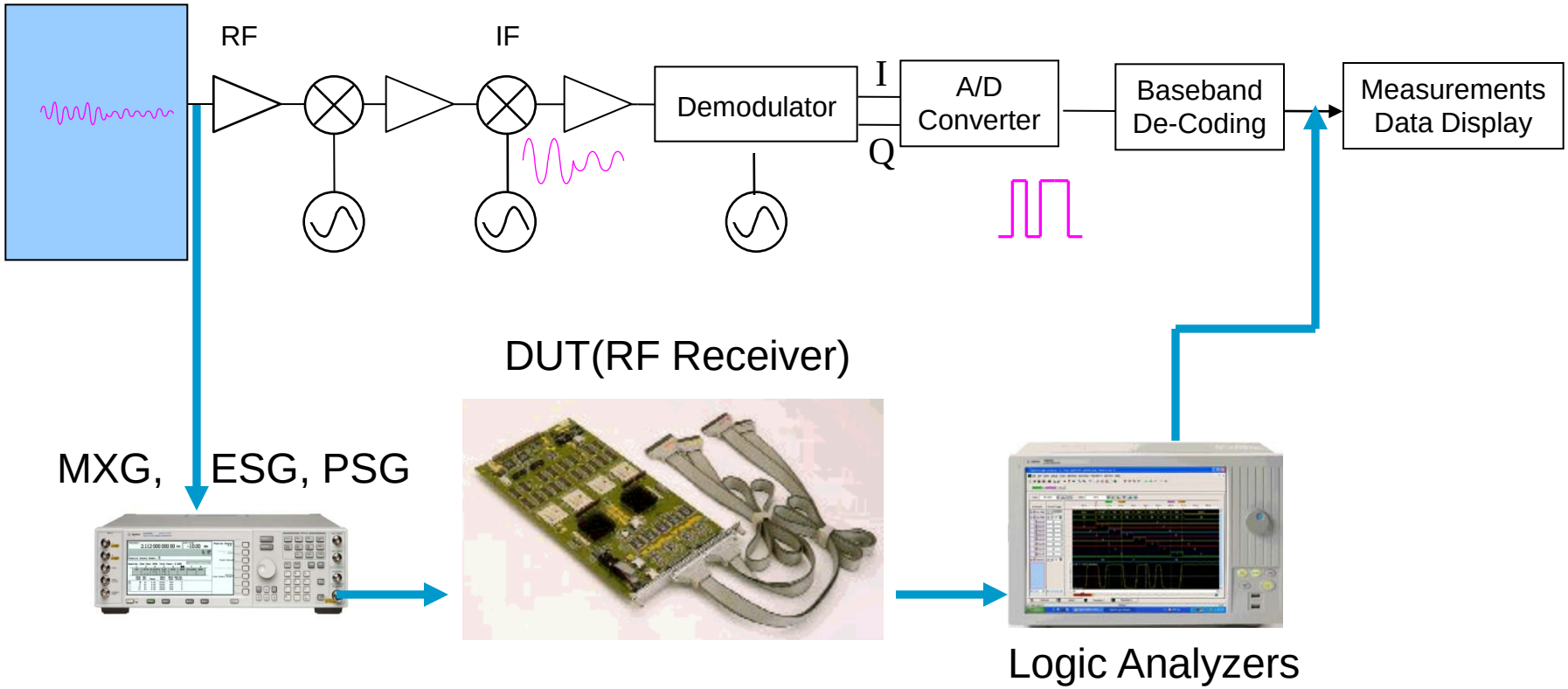

2. Using SystemVue, get test measurements, compare it to simulation references and help trouble shooting

LTE FDD UL Throughput Test Designs

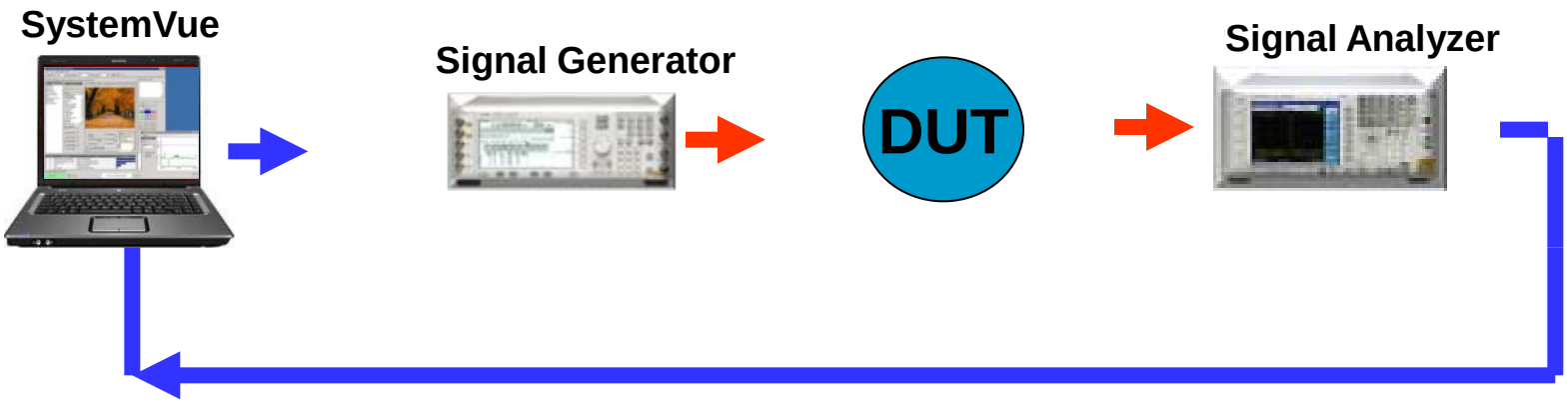

- LTE FDD or TDD Baseband data is generated by SV and sent to ESG
- ESGs/MXGs drived by SV generates Receiver test signals for the DUT
- The MXA captures received signals from DUT output and send to SV
- SV demod and decode signals and provide receiver performance

LTE Sensitivity test based on Throughput

Test setup based on 3GPP Standard, TS36.141

- Requirement: The reference sensitivity power level is the minimum mean power received at the antenna connector at which a throughput requirement shall be met for a specified reference measurement channel.
- FRC Test Parameters:

Reference channel	A1-1	A1-2	A1-3	A1-4	A1-5
Allocated resource blocks	6	15	25	3	9
DFT-OFDM Symbols per subframe	12	12	12	12	12
Modulation	QPSK	QPSK	QPSK	QPSK	QPSK
Code rate	1/3	1/3	1/3	1/3	1/3
Payload size (bits)	600	1544	2216	256	936
Transport block CRC (bits)	24	24	24	24	24
Code block CRC size (bits)	0	0	0	0	0
Number of code blocks - C	1	1	1	1	1
Coded block size including 12bits trellis termination (bits)	1884	4716	6732	852	2892
Total number of bits per sub-frame	1728	4320	7200	864	2592
Total symbols per sub-frame	864	2160	3600	432	1296

LTE FDD UL Throughput Test Designs

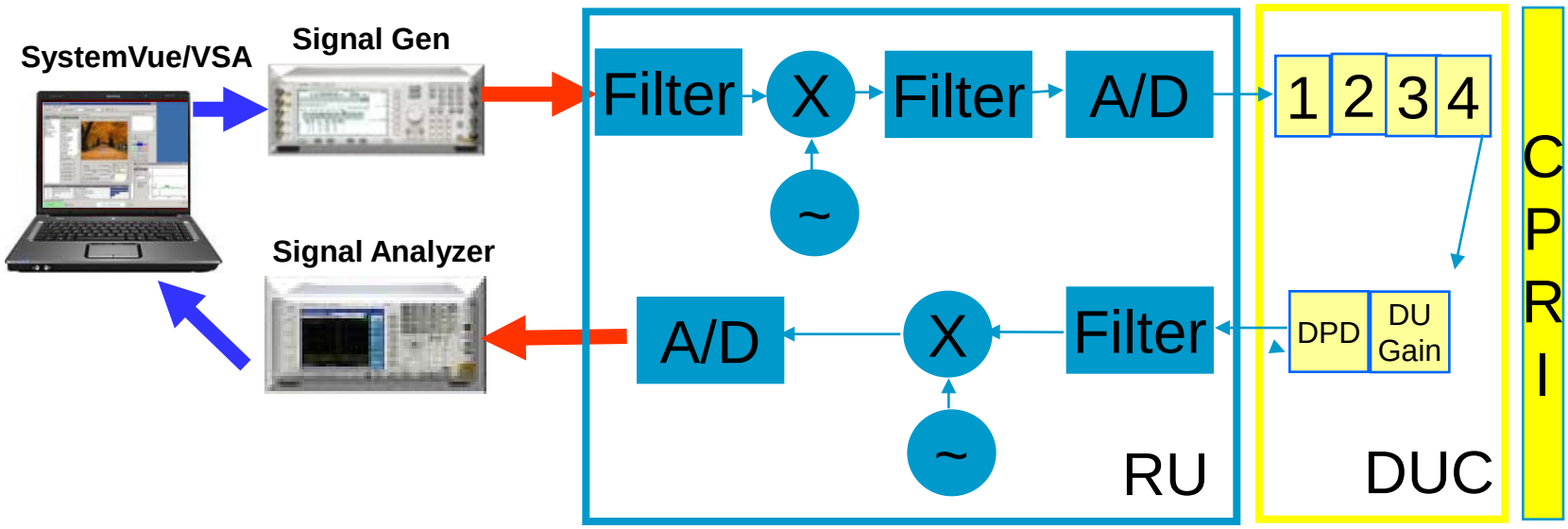

- LTE FDD or TDD Baseband data is generated by SV and sent to ESG
- ESGs/MXGs drived by SV generates Receiver test signals for the DUT
- The MXA captures received signals from DUT output and send to SV
- SV demod and decode signals and provide receiver performance

LTE FDD UL Throughput Test Designs

Signal Generation

- Test Parameters:

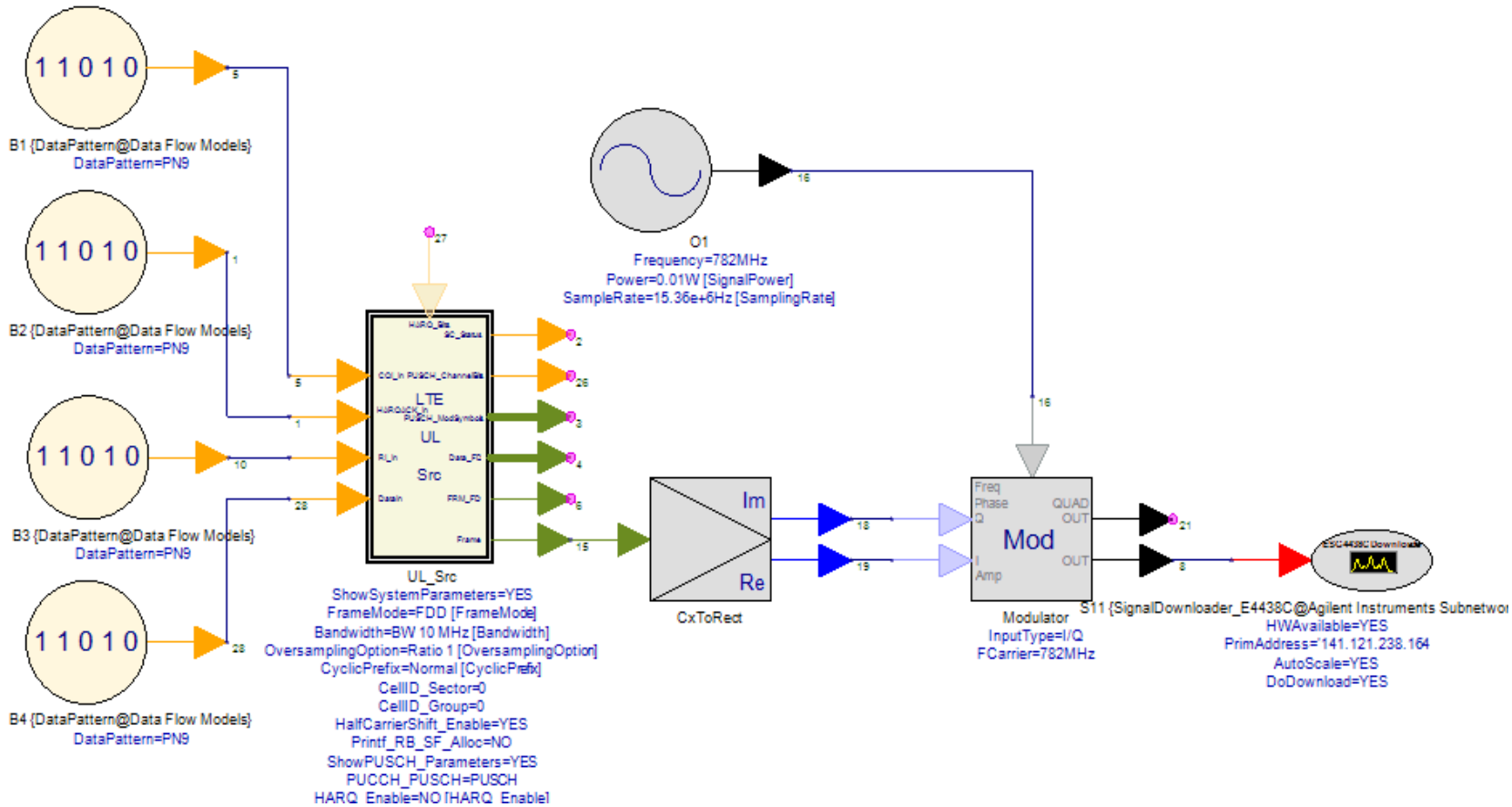

LTE FDD UL Throughput Test Designs

Signal Generation

- LTE FDD UL Test Signal from SV

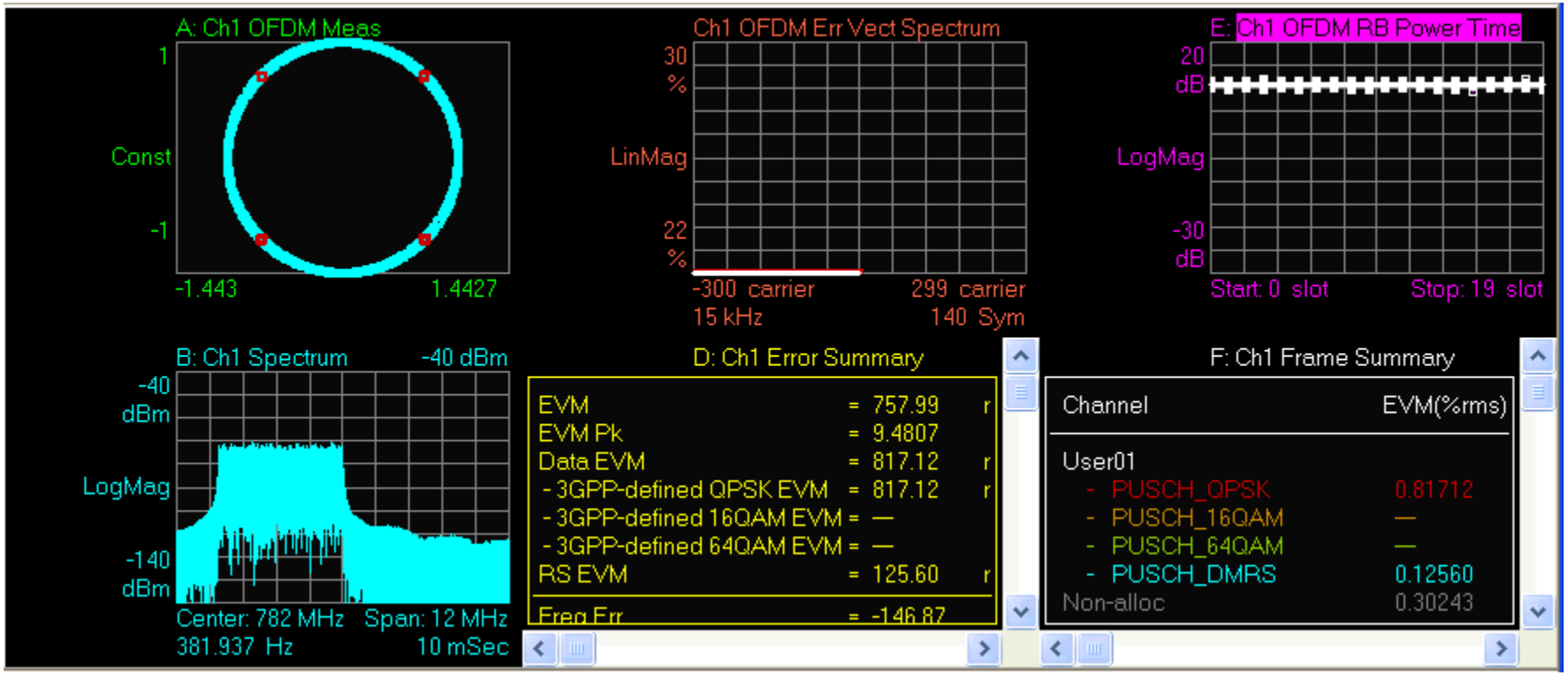

Agilent Technologies

LTE FDD UL Throughput Test Design

LTE FDD Receiver

- Test Design and Results:

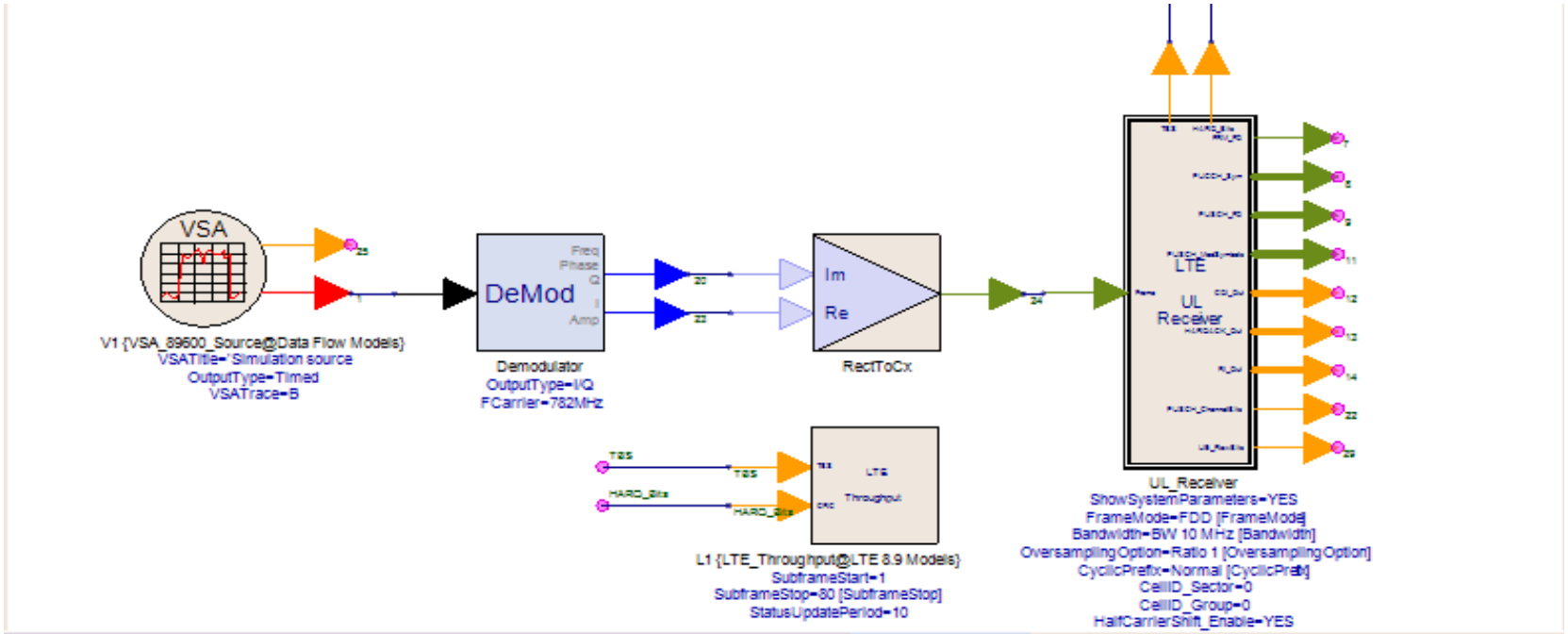

Simulation Log

DF2

```
The throughput measurement was finished.
>>> 80 subframes were processed.
>>> The throughput averaged over these subframes was 2216000 bps.
>>> Correspondingly, fraction (%) of the achieved throughput to the maximum throughput was 100.00%.
Execution time: 227.865 sec
```

LTE FDD UL Throughput Test Design

LTE FDD Receiver

- Test Design and Results: Throughput Vs SNR, BLER Vs SNR

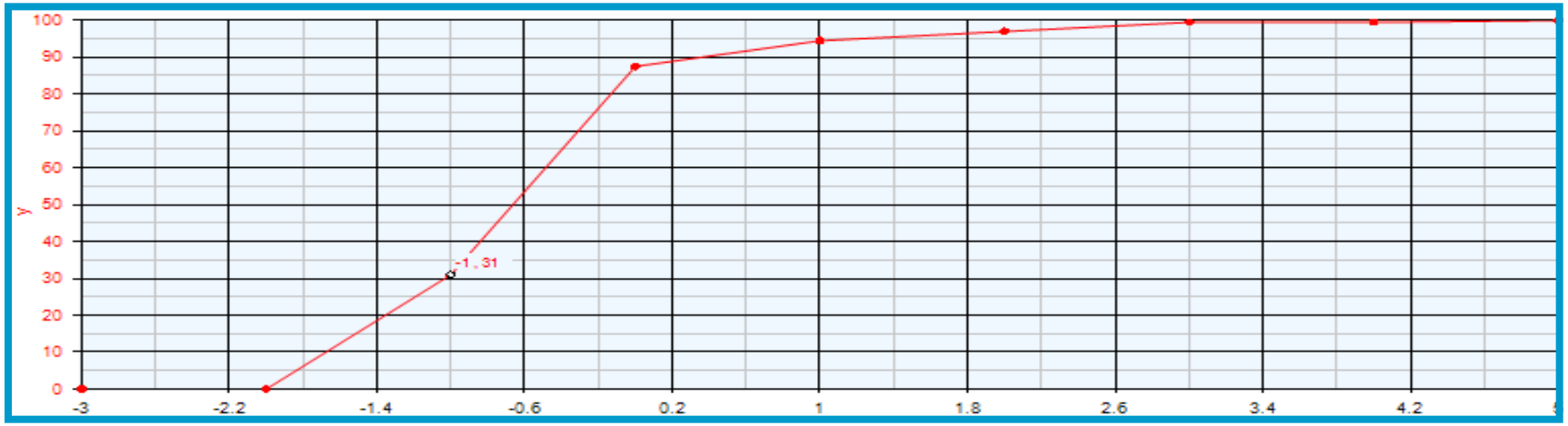

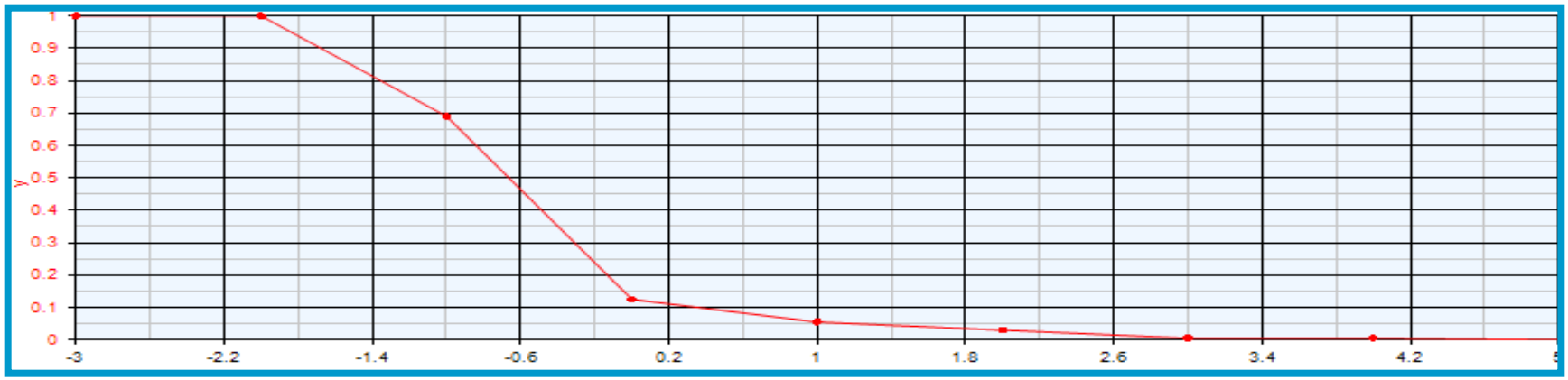

Agilent Technologies

LTE TDD UL Throughput Test Designs

Signal Generation

- Test Parameters:

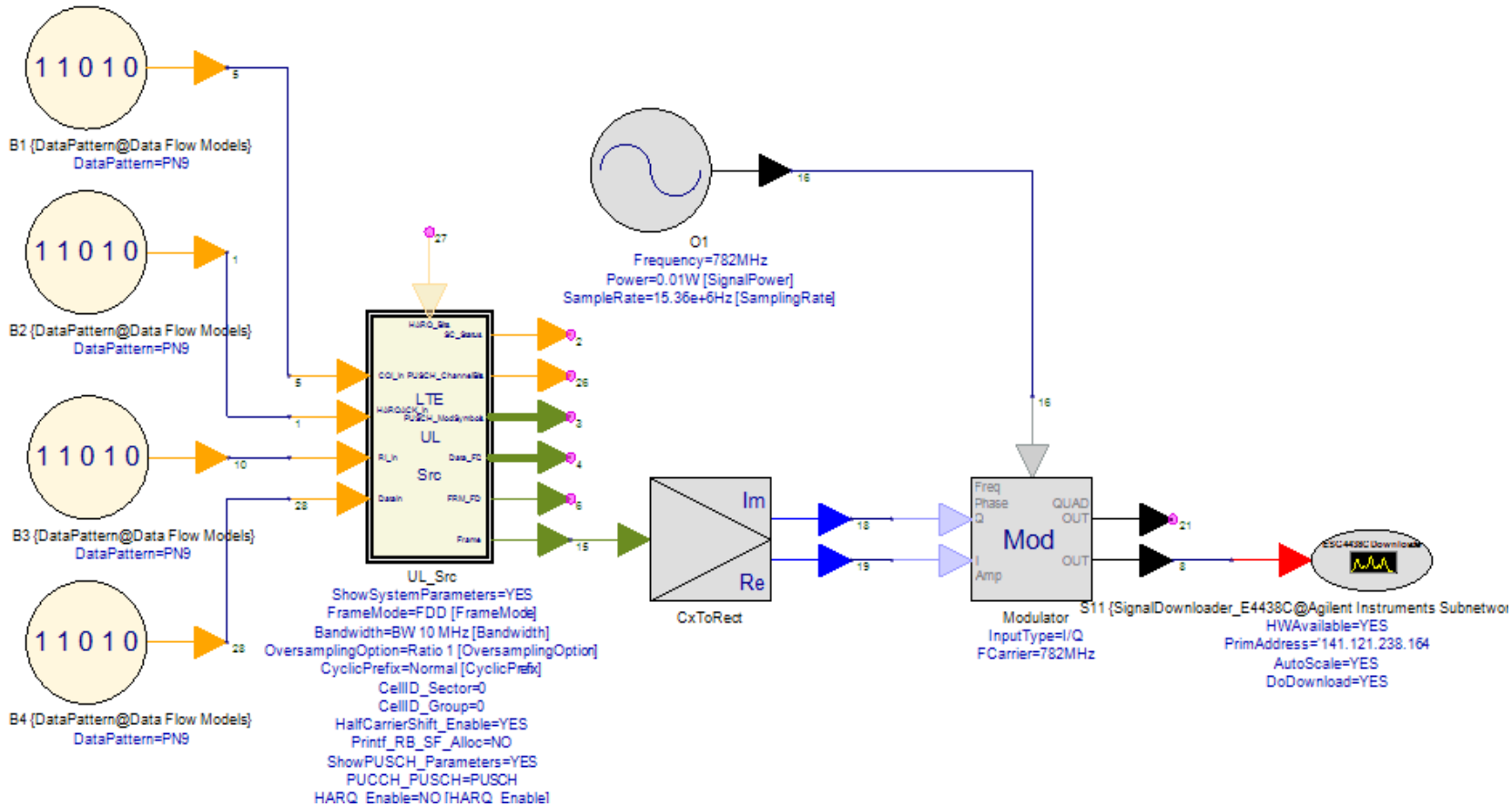

LTE TDD UL Throughput Test Designs

Signal Generation

- LTE TDD UL Test Signal from SV

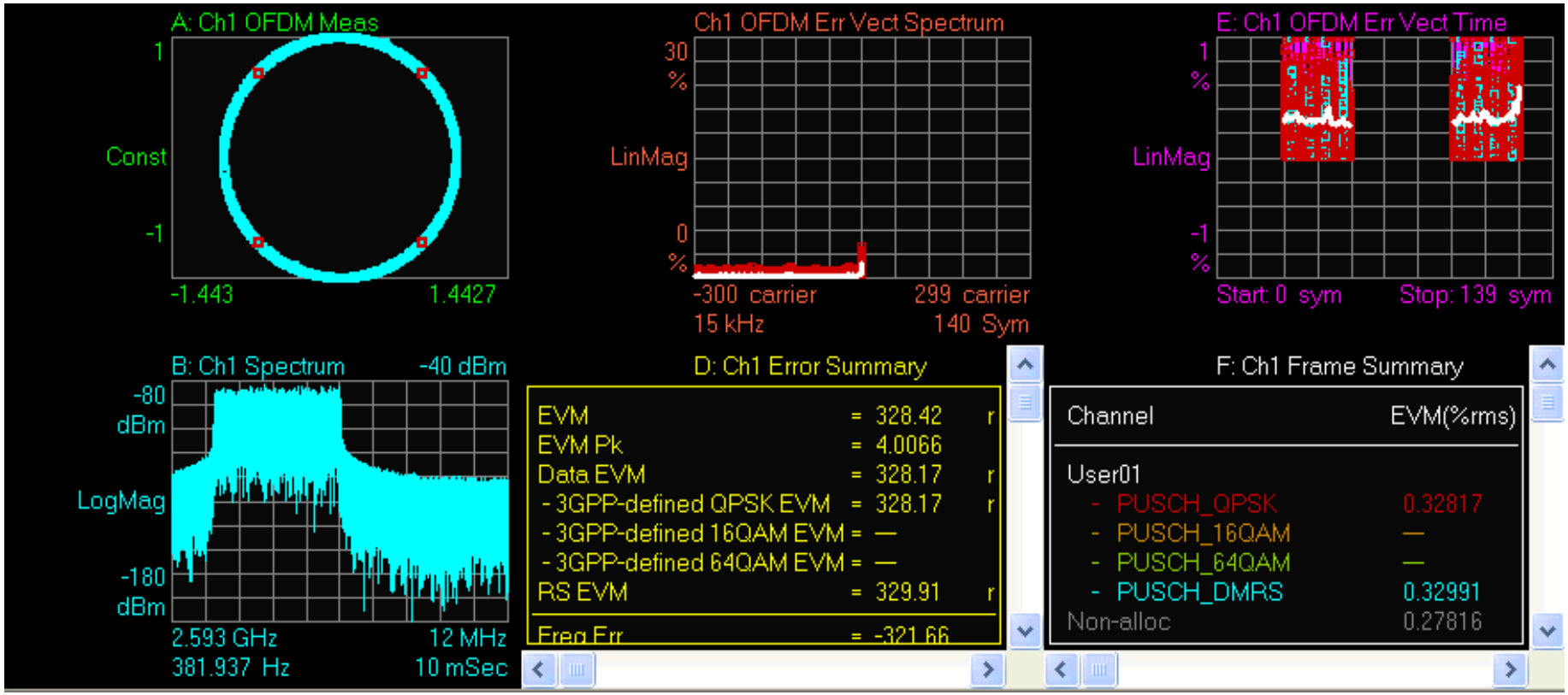

Agilent Technologies

LTE TDD UL Throughput Test Design

LTE TDD Receiver

- Test Design and Results:

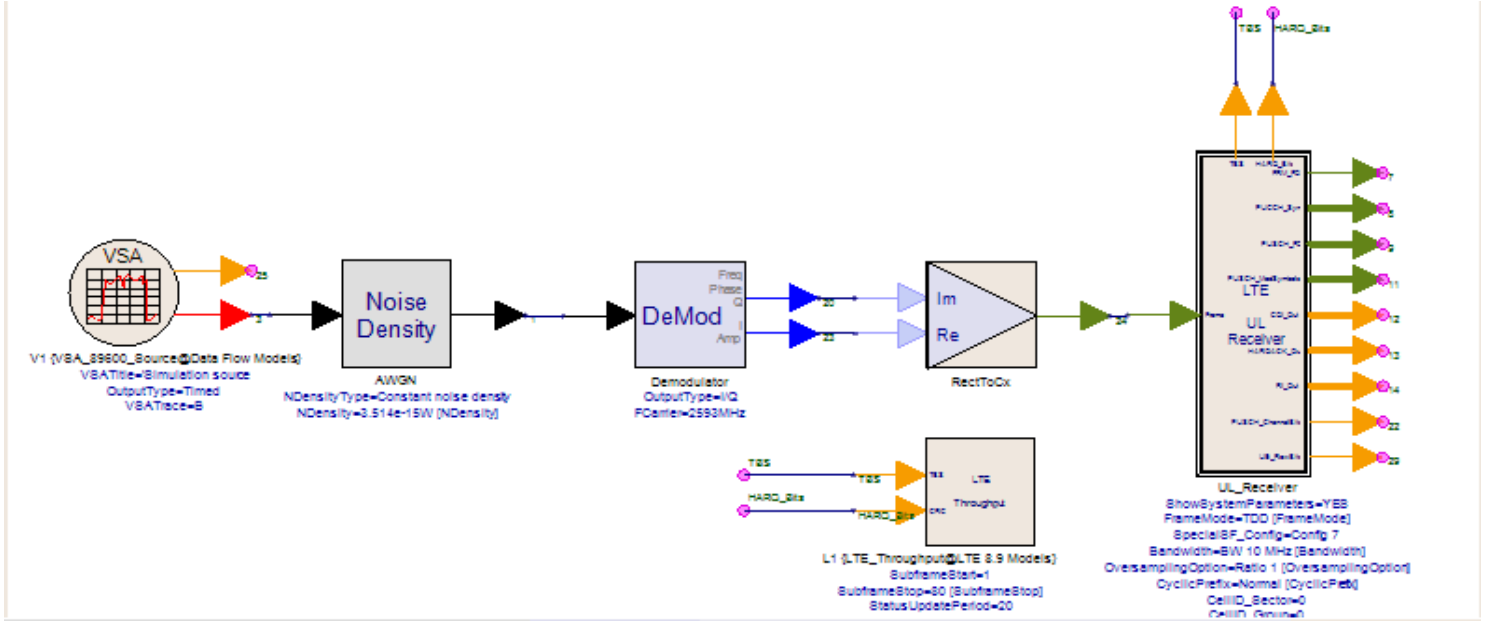

Simulation Log

DF2

```
The throughput measurement was finished.
>>> 80 subframes were processed.
>>> The throughput averaged over these subframes was 886400 bps.
>>> Correspondingly, fraction (%) of the achieved throughput to the maximum throughput was 100.00%.
Execution time: 127.65 sec
```

LTE FDD UL Throughput Test Design

LTE TDD Receiver

- Test Design and Results: Throughput Vs SNR, BLER Vs SNR

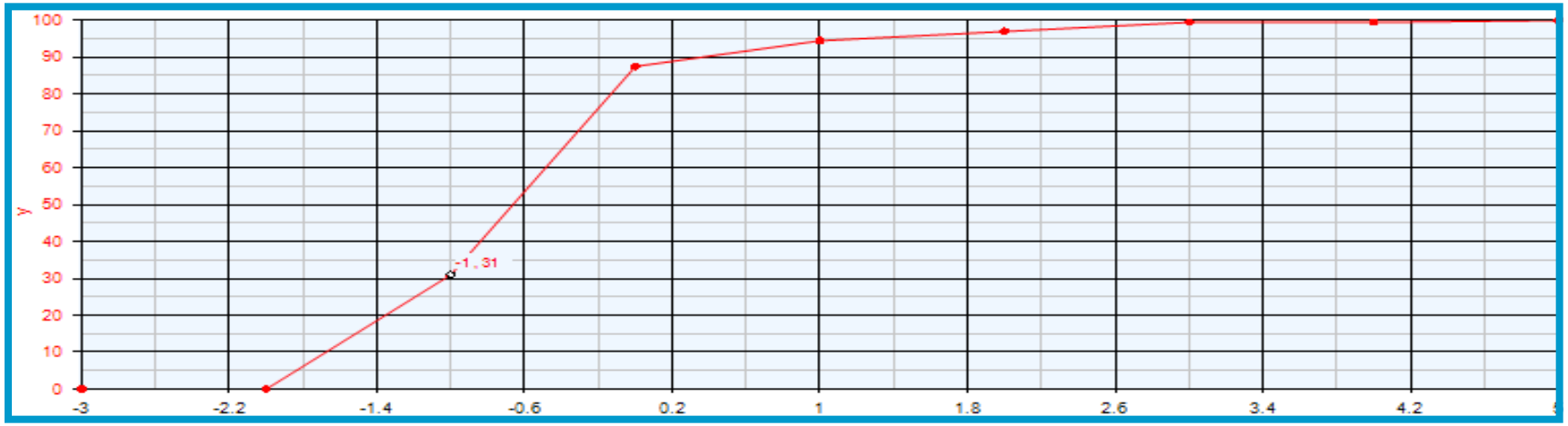

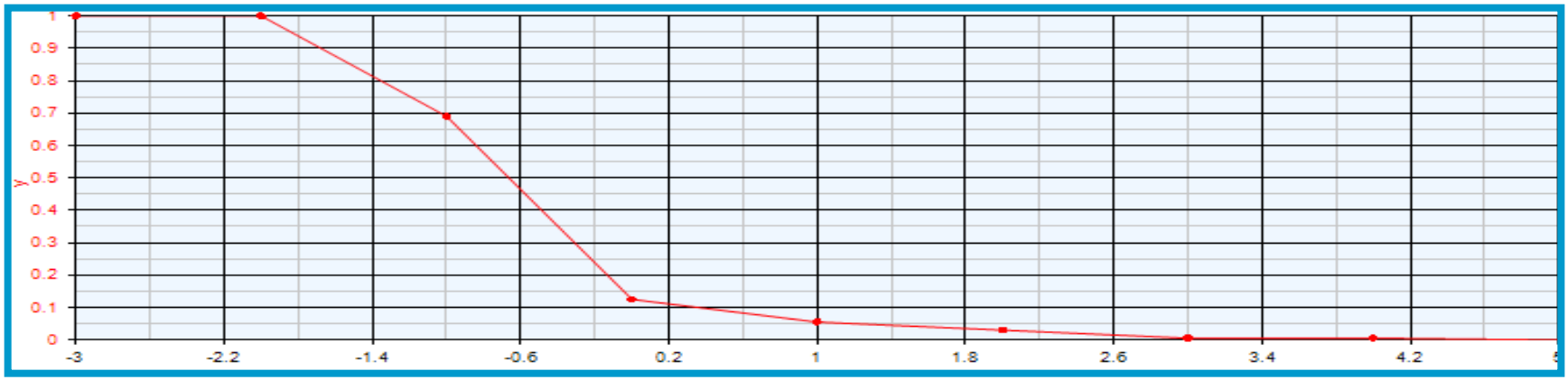

Agilent Technologies

Conclusions

- Throughput is an important measurement for characterizing LTE receiver performance. Another important measurement, receiver sensitivity is based on the throughput measurement
- To test the throughput, a test system needs a golden reference receiver and certain auto-configuration capability. During the developing period, a physical “golden” receiver is not available. The test approach we offered here is an integrated test solution with embedded LTE reference receiver (that serves as a “golden” receiver) and auto-configuration capability
- Agilent SystemVue software is used to integrate and control all test instrument hardware such as signal sources and signal analyzer as well as instrument software together as a test system
- Examples will show the LTE uplink receivers for both FDD and TDD can be tested based on LTE test specification. Receiver performance curves for Throughput vs. Signal Noise Ratio as well as Block Error Rate vs. Signal Noise Ratio are also given

www.agilent.com

www.agilent.com/find/eesof-systemvue

For more information about Agilent EEsof EDA, visit:

www.agilent.com/find/eesof

For more information on Agilent Technologies' products, applications or services, please contact your local Agilent office. The complete list is available at:

www.agilent.com/find/contactus

Contact Agilent at:

Americas

Canada	(877) 894-4414
Brazil	(11) 4197 3500
Mexico	01800 5064 800
United States	(800) 829-4444

Asia Pacific

Australia	1 800 629 485
China	800 810 0189
Hong Kong	800 938 693
India	1 800 112 929
Japan	0120 (421) 345
Korea	080 769 0800
Malaysia	1 800 888 848
Singapore	1 800 375 8100
Taiwan	0800 047 866
Thailand	1 800 226 008

Europe & Middle East

Austria	01 36027 71571
Belgium	32 (0) 2 404 93 40
Denmark	45 70 13 1515
Finland	358 (0) 10 855 2100
France	0825 010 700*
	*0.125 €/minute
Germany	07031 464 6333
Ireland	1890 924 204
Israel	972-3-9288-504/544
Italy	39 02 92 60 8484
Netherlands	31 (0) 20 547 2111
Spain	34 (91) 631 3300
Sweden	0200-88 22 55
Switzerland	0800 80 53 53
United Kingdom	44 (0) 118 9276201

Other European Countries:
www.agilent.com/find/contactus

Product specifications and descriptions in this document subject to change without notice.

© Agilent Technologies, Inc. 2010
Printed in USA, October 19, 2010
5990-6743EN