Keysight M9216A

PXI High Voltage Data Acquisition Module

32-Channel, 250 kS/s, 16-bit, 5 V/100 V

Data Sheet

KEYSIGHT TECHNOLOGIES

Introduction

The Keysight Technologies, Inc. M9216A is a multi-channel, large-range voltage measurement unit capable of acquiring dynamic positive voltage levels from multiple channels simultaneously, making it ideal for automated test equipment (ATE) in automotive electronics applications.

Product description

The M9216A is a two slot, PXI-based, high voltage data acquisition module with a 16-bit resolution that allows simultaneous measurement of 8 channels of positive voltages ranging from 1 mV to 100 V. Each channel in the module comes with a concurrent 5 V and 100 V measurement range instead of having multiple switchable voltage ranges. This allows each channel to acquire signals that fluctuate between very low and very high voltage levels without the need for switching ranges and doing separate measurements.

The M9216A module also comes with a built-in 32 to eight multiplexer, enabling 32 measurement ports to be connected to the eight acquisition channels expanding it to a full blown 32 channel acquisition module. Alternatively, these channels can also be routed out via auxiliary output connector J101 eliminating the need for external multiplexers and pin matrix cards for additional measurements.

With the support of up to 32 channels with each channel equipped with dual concurrent measurement ranges, the M9216A module is capable of doing fast parallel voltage level measurements with guaranteed accuracy. This is ideal for the automotive industry and since most automotive applications do not require negative voltage measurements, the M9216A's 16-bit ADC is fully used for positive voltages giving it better resolution hence better accuracy.

Application

- Automotive

Features

- 16-bit resolution
- 32 channels
- Dual concurrent voltage ranges for each channel:
  - > 5 V (1 mV to 5 V)
  - > 100 V (20 mV to 100 V)
  - Input accuracy at 5 V
  - > zero offset : 5 V range – 200 uV, 100 V range – 1 mV
  - > gain (% of reading): 5 V range – 0.05%, 100 V range – 0.05%
  - > noise @ 3 sigma: 5 V range – 200 uV, 100 V range – 2 mV
- Auxiliary outputs for additional measurements
- Connector compatibility with cPCI, PXI-H, PXI-1
- Included drivers: IVI-COM, IVI-C, LabVIEW G

Customer values

- High-channel count for fast and accurate acquisition of multiple voltage levels and doing parallel testing
- Concurrent dual range for each channel to support large voltage range without the need for switching ranges
- Auxiliary output for additional measurements

Easy Setup, Test, and Maintenance

Hardware platform

Compliance

The M9216A data acquisition module is PXI compliant, using either a cPCI, PXI-1 or PXI Hybrid slot. The product can be integrated with other test and automation modules in cPCI, PXI-1 and PXI-H chassis (hybrid slots). The PXI format offers high performance in a small, rugged package. It is an ideal deployment platform for many automated test systems. A wide array of complementary PXI products is currently available. Products include multimeters, waveform generators, local oscillators, digitizers, down converters and switch multiplexers.

Input range

The M9216A comes with a large input range with dual concurrent measurement range of 5 V and 100 V for each channel. The 5 V range caters for voltage levels of 1 mV to 5 V while the 100 V range caters for voltage levels of 20 mV to 100 V, enabling every channel to acquire voltage levels ranging from 1 mV to 100 V without the need for switching ranges, making it ideal for fast measurement needs.

Measurement channels & auxiliary outputs

The built-in 32 to eight multiplexer is constructed where each dual range acquisition channel in the M9216A is connected to four ports through a 4-to-1 multiplexer, two of the ports can also be routed out via the auxiliary output connector J101. Every eight ports connect to a one of four floating commons making it one acquisition bank as shown in Figure 1, making a total of four acquisition banks.

Software platform

IO libraries

Keysight IO Libraries Suite offers FAST and EASY connection to instruments and the newest version extends that capability to include modular instruments.

NEW support for PXI — The Keysight IO Libraries Suite helps you display ALL of the modules in your system. From here you can view information about the installed software or start the modules' soft front panel. Launch the modules' soft front panel directly from Keysight Connection Expert.

Drivers

The M9216A high voltage data acquisition module is supplied with a comprehensive portfolio of module drivers, documentation, examples, and software tools to help you quickly develop test systems with your software platform of choice. The module comes with IVI-COM, IVI-C, and LabVIEW G software drivers that work in the most popular test and measurement development environments including LabVIEW and LabWindows/CVI from National Instruments, Microsoft C/C++, C#, and VB.NET

Easy software integration

The module software support provides context sensitive help, complete documentation and code examples that allow a quick module set up and basic acquisition functionalities. These code examples can be easily modified, so that the card can be quickly integrated into a test system. Included are application code examples for LabVIEW, LabWindows/CVI, Visual Studio C, C++, and C# and Visual Basic.

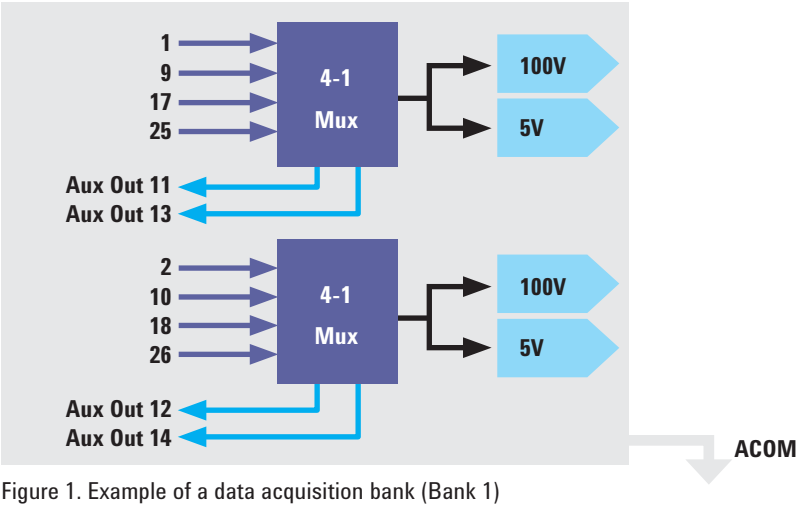

Figure 1. Example of a data acquisition bank (Bank 1)

Technical Specifications

Voltage input input (general)	
Number of Channels	8 concurrent dual range channels
Resolution	16 bit
Sampling rate	250 kS/s
Analog bandwidth (anti-aliasing filter)	85 kHz
Dual range specifications 5 V 100 V	 1 mV to 5V 20 mV to 100 V
Input coupling	DC
Input impedance	*550 kΩ (typical)*
Internal sample memory	30,000 samples for 5 V and 100 V range per channel (multiple mode) 240,000 samples for 5 V and 100 V range for one channel (single mode)
Trigger	Software and digital trigger Pre and post trigger sample acquisition Timed delay

Voltage input input accuracy (at 25 + 3° C)	
5 V Range	
Zero offset	±200 µV
Gain (% of reading)	±0.05%
Noise 3 sigma	200 µV
100 V Range	
Zero offset	1 mV
Gain (% of reading)	0.05%
Noise 3 sigma	2 mV

Multiplexer	
Input channels	32
Output channels	8 channels to ADC
	8 channels to primary auxiliary out
	8 channels to complementary auxiliary out
Maximum input voltage	100 V
Maximum input current	0.5 A
Maximum common return pin voltage with respect to chassis ground	45 V

Power	
Maximum current consumption from PXI 5 V 3.3 V	 0.8 A 0.5 A
Maximum input voltage	100 V
Maximum input current	0.5 A
Maximum common return pin voltage with respect to chassis ground	45 V
Warm up time	0.5 hour

NOTE: A minimum system warm up time of 15 minutes is required.
For optimum accuracy, a warm up time of one hour is recommended.

General Specifications

Environmental and physical	
Operating temperature	0 to 55° C
Storage temperature	–20° C to 70° C
Relative humidity	0% to 80% non condensing
Dimensions	3U, 2-slot, PXI/cPCI module; 40.30 mm x 129.11 mm × 212.73 mm (1.59 in. × 5.08 in. × 8.38 in.)
Weight	0.51 kg (1.12 lb)
Certifications and Compliance	Altitude : 10,000 ft (Operating)/ 15,000 ft (Non-operating)
CE Mark Compliance	2006/95/EC; 2004/108/EC
Safety	Pollution Degree 2
EMC Immunity	EN/IEC 61326-1 Industrial Environment
EMC Emissions	EN/IEC 61326-1 Class A

Definitions for specifications

Specifications describe the warranted performance of calibrated instruments that have been stored for a minimum of 2 hours within the operating temperature range of 0 to 50°C, unless otherwise stated, and after a 45 minute warm-up period. Data represented in this document are specifications unless otherwise noted.

Characteristics describe product performance that is useful in the application of the product, but that is not covered by the product warranty. Characteristics are often referred to as Typical or Nominal values. Characteristic are represented in italics.

– Typical describes characteristic performance, which 80% of instruments are expected to meet when operated over a 20 to 30 °C temperature range. Typical performance is not warranted.
– Nominal describes representative performance that is useful in the application of the product when operated over a 20 to 30 °C temperature range. Nominal performance is not warranted.

Note: All graphs contain measured data from several units at room temperature unless otherwise noted

Configuration and Ordering Information

Ordering Information

Model	Description
M9216A	M9216A PXI High voltage data acquisition, 32-channel, 250KS/S, 16-BIT, 100 V input

Accessories

M9216A-CD1	Software and product information on CD

Software

In addition, the M9216A includes a soft front panel graphical interface. This simple software application can be used to

- Enable verification that the modules are properly installed and working in the system.
- Assist in learning the module capability and behavior via interactive use.
- Assist in acquiring programming knowledge of the instrument.
- Assist in the verification and debugging of the system.

Model	Description
Keysight IO Libraries	Keysight IO Libraries Drivers, soft front panels and programming examples in LabVIEW, LabWindows/CVI, Visual Studio C, C++ and C#, Visual Basic, and MATLAB

1. For the M9216A to work properly, at least one PXI chassis and one PXI controller type must be available.

2. Keysight IO Libraries Suite 16.0 is required. The modular product won't work with Keysight IO Libraries Suite versions earlier than version 16.0.

Warranty and Calibration

Warranty and calibration are provided at the module level.

Advantage Services: Calibration and Warranty	
Keysight Advantage Services is committed to your success throughout your equipment's lifetime.	
Warranty	
	Standard warranty is 1 year
R-9MB-001-3C	1 year return-to-Keysight warranty extended to 3 years
R-9MB-001-5C	1 year return-to-Keysight warranty extended to 5 years

Calibration intervals

The M9216A is factory calibrated and shipped with a calibration certificate.

Calibration is recommended every year in order to verify product performance.

myKeysight

www.keysight.com/find/mykeysight
A personalized view into the information most relevant to you.

www.axiestandard.org
AdvancedTCA® Extensions for Instrumentation and Test (AXIe) is an open standard that extends the AdvancedTCA for general purpose and semiconductor test. Keysight is a founding member of the AXIe consortium. ATCA®, AdvancedTCA®, and the ATCA logo are registered US trademarks of the PCI Industrial Computer Manufacturers Group.

www.pxisa.org
PCI eXtensions for Instrumentation (PXI) modular instrumentation delivers a rugged, PC-based high-performance measurement and automation system.

Three-Year Warranty
www.keysight.com/find/ThreeYearWarranty
Keysight's commitment to superior product quality and lower total cost of ownership. The only test and measurement company with three-year warranty standard on all instruments, worldwide.

Keysight Assurance Plans
www.keysight.com/find/AssurancePlans
Up to five years of protection and no budgetary surprises to ensure your instruments are operating to specification so you can rely on accurate measurements.

www.keysight.com/quality
Keysight Technologies, Inc.
DEKRA Certified ISO 9001:2008
Quality Management System

Keysight Channel Partners
www.keysight.com/find/channelpartners
Get the best of both worlds: Keysight's measurement expertise and product breadth, combined with channel partner convenience.

www.keysight.com/find/modular
www.keysight.com/find/m9216a

For more information on Keysight Technologies' products, applications or services, please contact your local Keysight office. The complete list is available at:
www.keysight.com/find/contactus

Americas

Canada	(877) 894 4414
Brazil	55 11 3351 7010
Mexico	001 800 254 2440
United States	(800) 829 4444

Asia Pacific

Australia	1 800 629 485
China	800 810 0189
Hong Kong	800 938 693
India	1 800 112 929
Japan	0120 (421) 345
Korea	080 769 0800
Malaysia	1 800 888 848
Singapore	1 800 375 8100
Taiwan	0800 047 866
Other AP Countries	(65) 6375 8100

Europe & Middle East

Austria	0800 001122
Belgium	0800 58580
Finland	0800 523252
France	0805 980333
Germany	0800 6270999
Ireland	1800 832700
Israel	1 809 343051
Italy	800 599100
Luxembourg	+32 800 58580
Netherlands	0800 0233200
Russia	8800 5009286
Spain	0800 000154
Sweden	0200 882255
Switzerland	0800 805353
	Opt. 1 (DE)
	Opt. 2 (FR)
	Opt. 3 (IT)
United Kingdom	0800 0260637

For other unlisted countries:
www.keysight.com/find/contactus
(BP-07-10-14)

This information is subject to change without notice.
© Keysight Technologies, 2012 - 2014
Published in USA, August 2, 2014
5990-7582EN
www.keysight.com