Agilent 35688E-ECH

Enable Channelized Data for Agilent E3238S/35688E Signal Intercept and Collection System

Technical Overview

The E3238S Channelizer option (ECH) provides the capability to deliver multiple channels of narrowband complex time data or FM demodulated data to an external processing workstation. Data can be delivered to the processing workstation via a LAN connection or a serial Front Panel Data Port (sFPDP or simply FPDP) connection. If FPDP is used, an FPDP interface module and its driver software must be installed in the processing workstation.

Channelizer channels can be tasked manually through the E3238S signal processing GUI, from an E3238S alarm, or by sending a command string from the processing workstation to the E3238S via a LAN socket. Once a channel is tasked, it may be released by sending a command string from the processing workstation to the E3238S, by a DF bearing out of range, or by satisfying a duration specified when the channels was tasked.

Systems including the channelizer can be configured with signal delay. This allows the client processing workstation to obtain narrowband time data starting at a time prior to the assignment time.

E3238S System Key Features

- High performance receiver front-end with high-resolution, high-speed search
- Sophisticated energy detection scheme to reduce time data to only signals of interest
- Low cost scalability and higher density by adding E9821A DSP's and narrowband channels
- Low maintenance with more off-the-shelf receiver and data interface software
- Less development work with higher level of integration

35688E Option ECH Key Features

- Delivers multiple channels of narrowband time data
- Low cost per channel using digital downconverter channels
- LAN or serial optical interface (sFPDP)

Agilent Technologies

Capture Time Data with the Enable Channelized Data Option

With the enable channelized data option (35688E-ECH), the E3238S can be a COTS receiver and server for capturing time data on signals. It enables the complex time data on the narrowband channels in the E3238S/35688E system to be transferred at high speed to a central processing host. The 35688E-ECH Option is tightly integrated into the E3238S/35688E signal intercept and collection system features. Using the E3238S/35688E system as a receiver and server provides high performance search and collection, sophisticated low cost scalability, a higher level of integration, and access to the newest signals.

E3238S/35688E System Overview

The E3238S/35688E system is optimized for very high speed RF spectral search with high resolution. It uses a wideband stepped FFT technique to achieve exceptionally fast sweep rates, up to 10 GHz per second, while maintaining high resolution and wide dynamic range. This architecture is tightly integrated with specific features for energy detection and it is potentially more cost effective than many individual receivers.

The E3238S/35688E system has signal detection tools for efficiency and productivity in sorting through the spectrum data to identify signals of interest. The multiple-receivers' architecture generally does not have sophisticated filtering to only your signals of interest, therefore there may be extraneous data transferred which uses valuable data transfer time and bandwidth.

The E3238S/35688E system has low cost narrowband signal processing with multichannel simultaneous time domain data recording using Digital Downconverter (DDC) hardware. The narrowband signal processing collects or records the specific signal information by staring at any 36 MHz bandwidth part of the spectrum. E3238S/N6820E systems can be configured with hundreds of narrowband channels, each with independently programmable center frequencies and bandwidths.

In E3238S systems without the 35688E-ECH Option, customers were required to download digital signal processing (DSP) utilities to get the time data from the tuner/analog to digital converter (ADC) into their host processing system. Now, customers can get the time data only on signals of interest with a limited amount of custom programming.

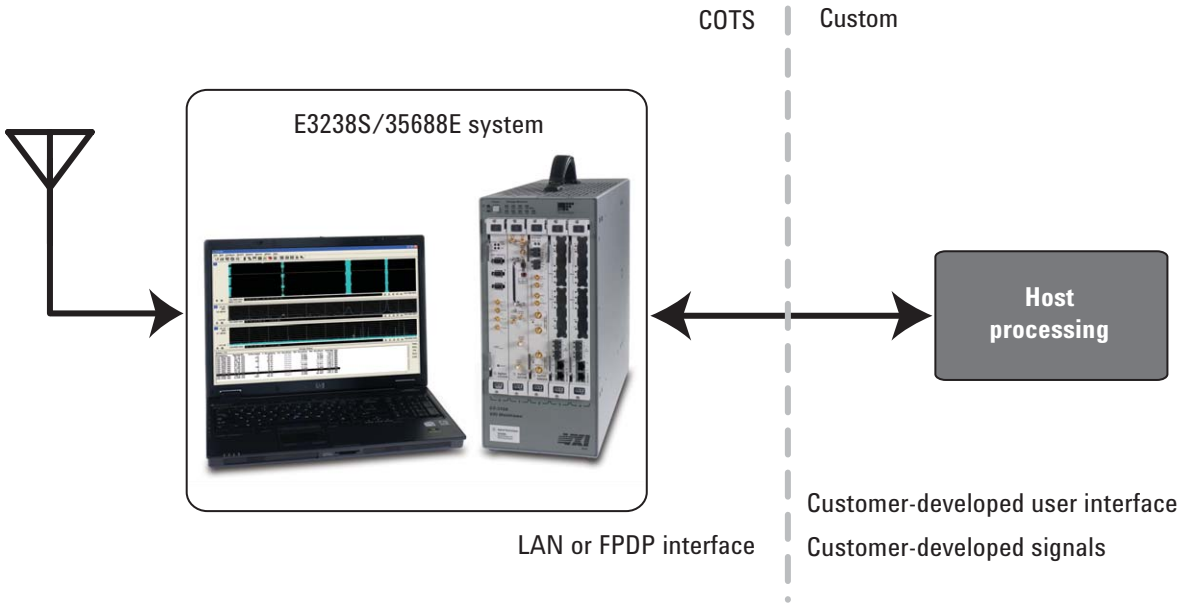

Figure 1. The E3238S/35688E system provides high-speed search and collection for signals of interest. Time data on signals is transferred to the host processing unit via a high-speed front panel data port or LAN.

Automate with Alarm Tasks

Typically, channelized data is automatically sent to the host computer using alarm tasks. Channelized data on single channels can be set up as a task manually through the E3238S signal processing graphical user interface, from an E3238S alarm, or by sending a command string from the processing workstation to the E3238S via a LAN socket. Once a channel is tasked, it may be released by sending a command string from the processing workstation to the E3238S, by a direction finding (DF) bearing out of range, or by satisfying a duration specified when the channels were tasked.

High Speed Data Interfaces

With the 35688E-ECH Option, the narrowband time data can be delivered to the host processing workstation via a LAN connection or a serial Front Panel Data Port (sFPDP or simply FPDP) connection. With either interface, software in the host processing system must be developed to accept the time data via these interfaces. LAN is a standard interface on computers, workstations and servers, so it is readily available at no extra cost. However, the maximum data rate to the host processing system is about 5 megabytes per second (MB/s). In the E3238S/35688E system, time data is first transferred from the receiver hardware to the PC. Then, the time data is transferred via LAN from the PC to the host processing system.

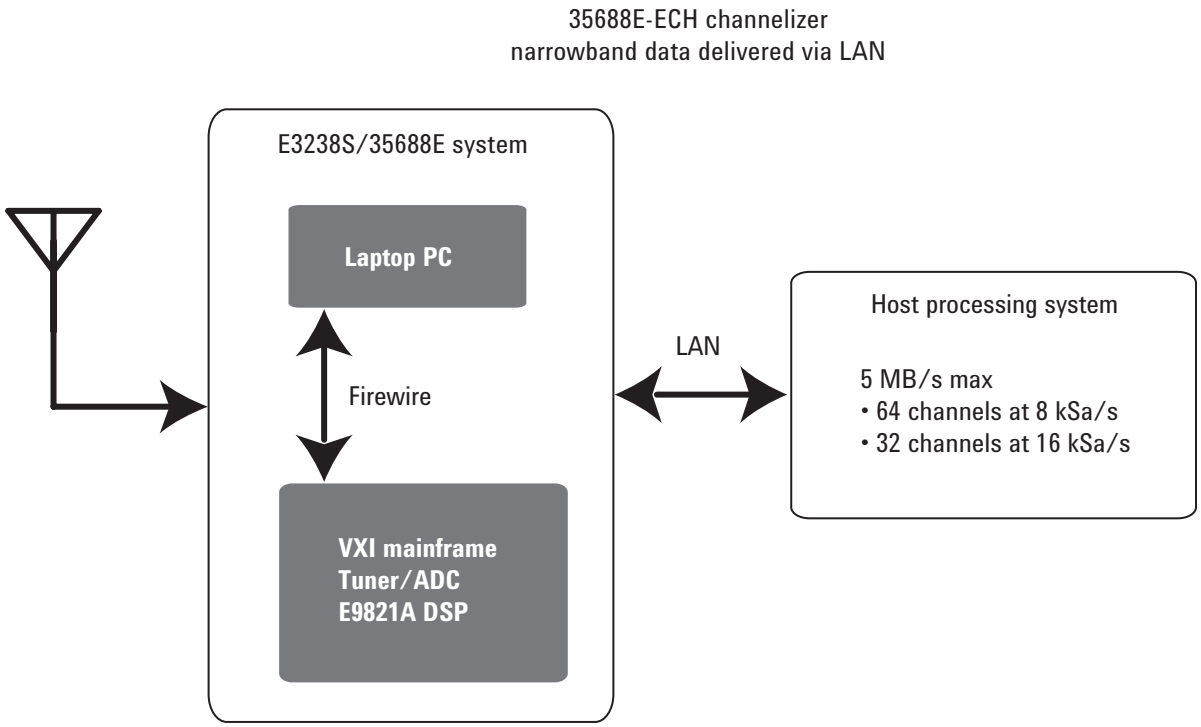

Figure 2. The E3238S/35688E system first sends the narrowband time data on signals over the firewire interface to the PC. Then, the PC transfers this time data to the host processing unit via a LAN interface. The maximum data rate is about 5 MB/s (e.g. 64 channels at 8 kSa/s is 4.096 MB/s).

The LAN bandwidth may not be a limitation on many system configurations. If you consider the advanced energy detection features in the E3238S/35688E, you will only get time data on the few signals of interest. Now, you can be very selective in using the limited LAN interface bandwidth.

The E3238S/35688E system can pass time data from 32 channels sampled at 16 kilosamples per second (kSa/s) or 64 channels sampled at 8 kSa/s.

The serial FPDP interface can handle data rates greater than 40 MB/s. Using the E3238S/35688E with FPDP interface requires installation of the Systran SL240 family FibreXtreme Module into the host processing system. Instead of passing data to the PC, time data is directly transferred via optical cables from the E9821A DSP module to the SL240 module. With the serial FPDP interface, 32 channels can be sampled at 150 kSa/s or 64 channels can be sampled at 75 kSa/s. Large channel count systems will provide more time data for accurate signal analysis with the serial FPDP.

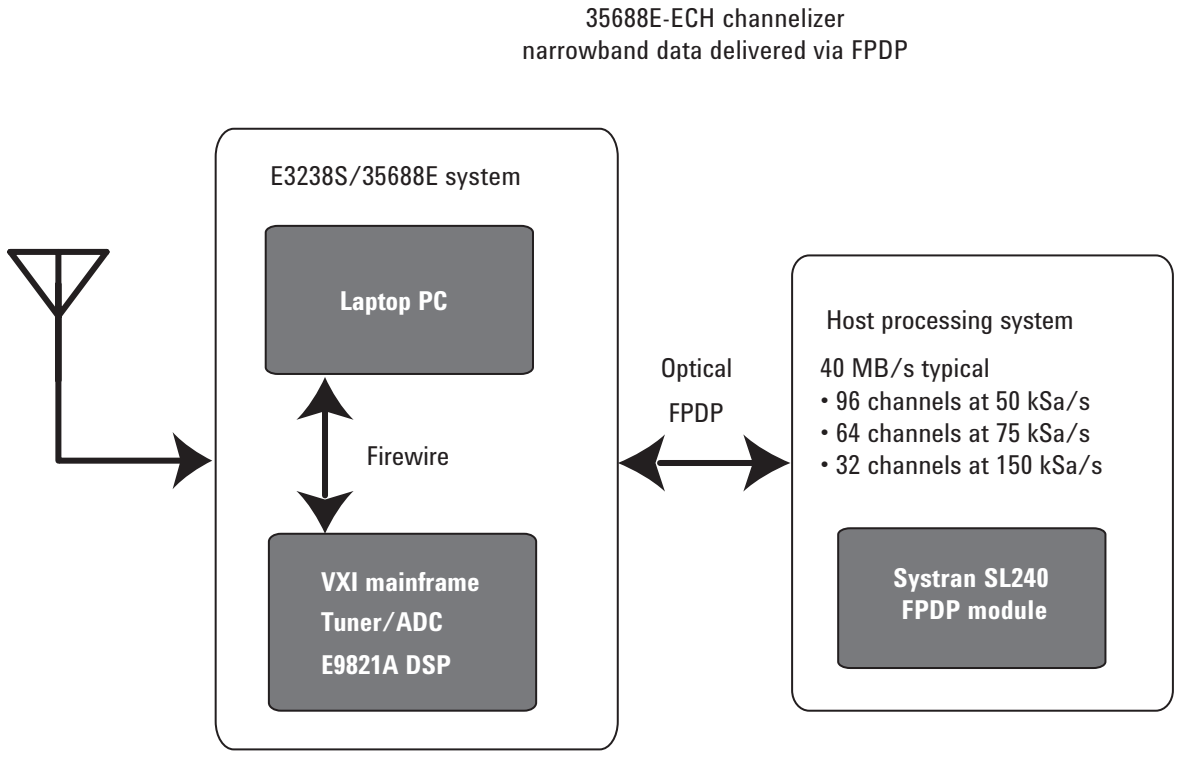

Figure 3. The E3238S/35688E system first sends the narrowband time data on signals directly from the DSP to the host processing unit via a serial optical FPDP interface. The maximum data rate is about 40 MB/s (e.g. 64 channels at 75 kSa/s is 38.4 MB/s), or potentially greater.

Ordering Information and Configuration

35688E-ECH Enable Channelized Data

The ECH option works with the E9821A-200 digital downconverter channels.

Curtis-Wright Embedded Controls FPDP module and optical cables are required for the high throughput connection to an external workstation.

The products identified in this literature are subject to the export control regulations of the U.S. Departments of State and Commerce. An export license may be required for sale of these products outside of the United States.

Related Literature

Agilent E3238 Signal Development System, Product Overview
literature number
5989-1505EN

Agilent E3238 Signal Intercept and Collection Solution, Configuration and Performance Reference Guide
literature number
5989-1795EN

Agilent Email Updates

www.agilent.com/find/emailupdates
Get the latest information on the products and applications you select.

Agilent Direct

www.agilent.com/find/agilentdirect
Quickly choose and use your test equipment solutions with confidence.

Remove all doubt

Our repair and calibration services will get your equipment back to you, performing like new, when promised. You will get full value out of your Agilent equipment throughout its lifetime. Your equipment will be serviced by Agilent-trained technicians using the latest factory calibration procedures, automated repair diagnostics and genuine parts. You will always have the utmost confidence in your measurements.

Agilent offers a wide range of additional expert test and measurement services for your equipment, including initial start-up assistance, onsite education and training, as well as design, system integration, and project management.

For more information on repair and calibration services, go to:

www.agilent.com/find/removealldoubt

Agilent Open

www.agilent.com/find/open
Agilent Open simplifies the process of connecting and programming test systems to help engineers design, validate and manufacture electronic products. Agilent offers open connectivity for a broad range of system-ready instruments, open industry software, PC-standard I/O and global support, which are combined to more easily integrate test system development.

LXI

www.lxistandard.org
LXI is the LAN-based successor to GPIB, providing faster, more efficient connectivity. Agilent is a founding member of the LXI consortium.

www.agilent.com

For more information on Agilent Technologies' products, applications or services, please contact your local Agilent office. The complete list is available at:

www.agilent.com/find/contactus

Americas

Canada	(877) 894-4414
Latin America	305 269 7500
United States	(800) 829-4444

Asia Pacific

Australia	1 800 629 485
China	800 810 0189
Hong Kong	800 938 693
India	1 800 112 929
Japan	0120 (421) 345
Korea	080 769 0800
Malaysia	1 800 888 848
Singapore	1 800 375 8100
Taiwan	0800 047 866
Thailand	1 800 226 008

Europe & Middle East

Austria	01 36027 71571
Belgium	32 (0) 2 404 93 40
Denmark	45 70 13 15 15
Finland	358 (0) 10 855 2100
France	0825 010 700*
	*0.125 €/minute
Germany	07031 464 6333**
	**0.14€/minute
Ireland	1890 924 204
Israel	972-3-9288-504/544
Italy	39 02 92 60 8484
Netherlands	31 (0) 20 547 2111
Spain	34 (91) 631 3300
Sweden	0200-88 22 55
Switzerland	0800 80 53 53
United Kingdom	44 (0) 118 9276201

Other European Countries:
www.agilent.com/find/contactus

Revised: July 17, 2008

Product specifications and descriptions in this document subject to change without notice.

© Agilent Technologies, Inc. 2005, 2008

Printed in USA, August 21, 2008
5989-3650EN

Agilent Technologies